| REV | DESCRIPTION | DRAWN / APPROVED | DATE / DATE |
|---|---|---|---|
| A | ITEMS 25 THRU 28 ADDED & ITEM 15, QTY WAS 2. | J. CATALANELLO | 12-JUN-2003 |
| | | H. CEASE | 17-JUN-2003 |
| B | ITEM 14,15 & 25 DWGS REVISED, ITEMS 26 & 28 WAS 1/4-20, ITEM 27 QTY WAS 6. | J. CATALANELLO | 04-OCT-2006 |
| | | H. CEASE | 05-OCT-2006 |
| C | ITEM 15 DWGS REVISED-(REMOVED HOLE); ITEM 25 DELETED | PAT POLL | 10-MAY-2007 |
| | | H. CEASE | 10-MAY-2007 |

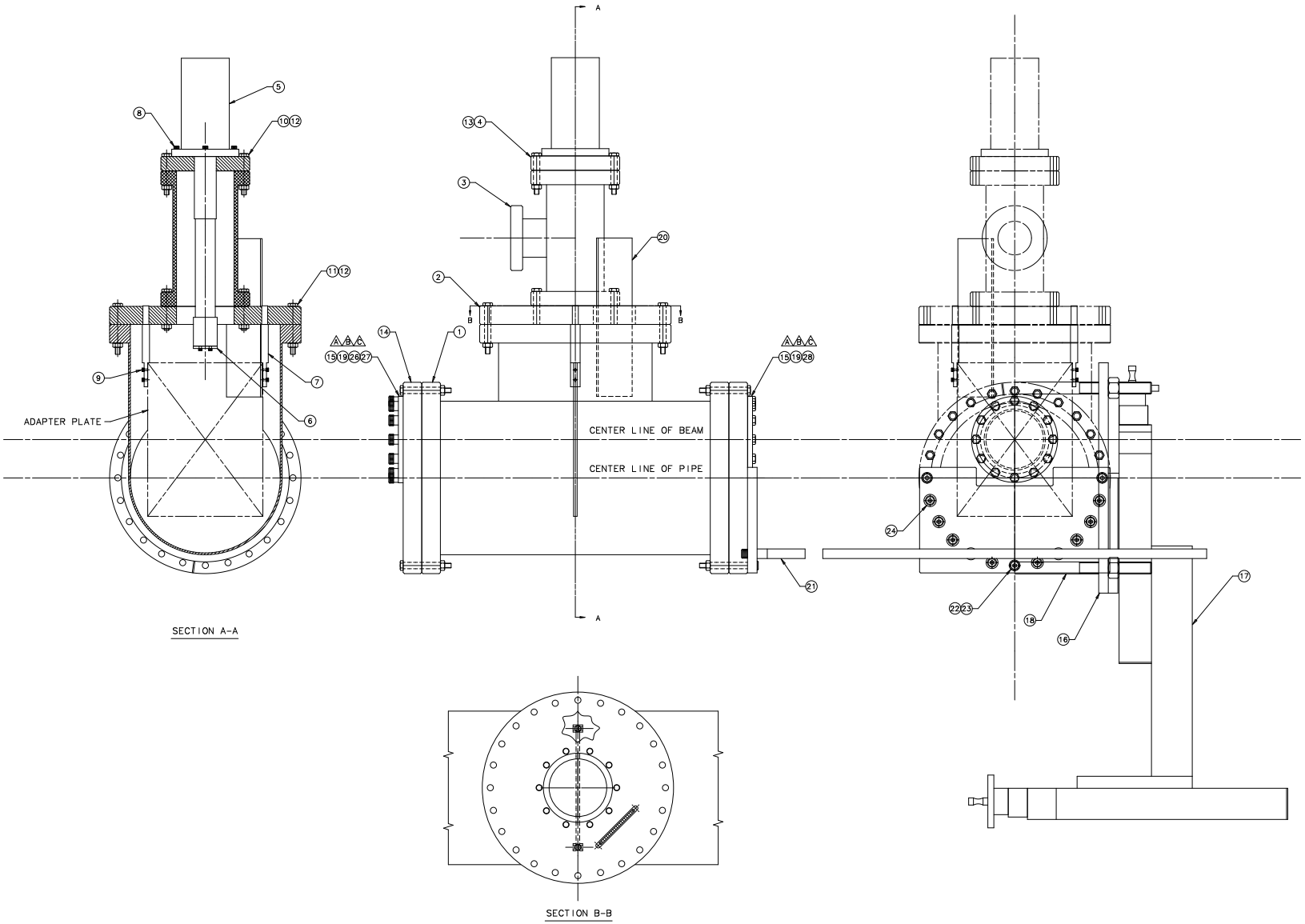


| ITEM | PART NO. | DESCRIPTION OR SIZE | QTY. |
|---|---|---|---|
| 28 | COML | SCREW, HEX HD, 5/16-18 X 1/2 LG MCMASTER-CARR P/N 92620A578 | 12 |
| 27 | COML | SPRING, PRECISION COMPRESSION, MAX LOAD 7.97 LBS MCMASTER-CARR P/N 9435K115 | 12 |
| 26 | COML | SCREW, SHOULDER, 3/8 X 1/2 LG, 5/16-18 X 1/2 LG MCMASTER-CARR P/N 94035A403 | 12 |
| 25 | | | |
| 24 | COML | SCREW, SOCKET HD, 1/4-20 X 2.50 LG MCMASTER-CARR P/N 92196A552 | 10 |
| 23 | COML | SCREW, SOCKET HD, 5/16-18 X 2.50 LG MCMASTER-CARR P/N 92196A593 | 3 |
| 22 | COML OR 1210-068000 | NUT, HEX HD, 5/16-18 MCMASTER-CARR P/N 91845A030 | 3 |
| 21 | MD-407424 | CRYO ALIGNMENT BRACKET ASSEMBLY | 1 |
| 20 | FERMILAB | CRYO FEED-THRU BOARD FOR preFPIX2 PLANE | 1 |
| 19 | COML | O-RING, BUNA-N, 3 1/4 ID X 3 1/2 OD MCMASTER-CARR P/N 9452K165 | 2 |
| 18 | COML | U-BOLT, FOR 8" PIPE MCMASTER-CARR P/N 29605T14 | 1 |
| 17 | FERMILAB | CRYO SLIDE ASSEMBLY | 1 |
| 16 | MD-407407 | CRYO/SLIDE SUPPORT PLATE | 1 |
| 15 | MD-407404 | WINDOW SUPPORT PLATE | 2 |
| 14 | MD-407405 | BLANK FLANGE 10 INCH OD | 2 |
| 13 | COML | O-RING, BUNA-N, 2 ID X 2 1/4 OD MCMASTER-CARR P/N 9452K64 | 1 |
| 12 | COML OR 1210-064000 | NUT, HEX HD, 1/4-20 MCMASTER-CARR P/N 91845A029 | 89 |
| 11 | COML OR 1226-052600 | SCREW, HEX HD CAP, 1/4-20 X 2.50 LG MCMASTER-CARR P/N 92186A552 | 59 |
| 10 | COML OR 1226-052500 | SCREW, HEX HD CAP, 1/4-20 X 2.00 LG MCMASTER-CARR P/N 92186A550 | 20 |
| 9 | COML | SCREW, SOCKET HD CAP, 4-40 X 3/8 LG MCMASTER-CARR P/N 91251A108 | 4 |
| 8 | COML | SCREW, SOCKET HD CAP, 4-40 X 1/4 LG MCMASTER-CARR P/N 91251A106 | 4 |
| 7 | MD-407400 | CARD HANGER ROD | 2 |
| 6 | MD-407403 | ROUND PLATE DETAIL | 1 |
| 5 | WAYNE STATE UNIV | COMPRESSOR, MODEL CP510 CRYOMECH, INC. DWG #AL10 SPEC | 1 |
| 4 | MD-407402 | BLANK FLANGE | 1 |
| 3 | COML | REDUCING TEE, MDC P/N 404018 | 1 |
| 2 | MD-407401 | REDUCING FLANGE | 1 |
| 1 | COML | TEE, 8 INCH O.D. MDC P/N 404009 | 1 |

PARTS LIST

| UNLESS OTHERWISE SPECIFIED | | | ORIGINATOR | H.CEASE | 24-APR-2002 |
|---|---|---|---|---|---|
| .XX | .XXX | ANGLES | DRAWN | J.CATALANELLO | 25-APR-2002 |
| ± | ± | ± 1° | CHECKED | C. GROZIS | 26-NOV-2002 |
| | | | APPROVED | H.CEASE | 26-NOV-2002 |

1. BREAK ALL SHARP EDGES .015 MAX.
2. DO NOT SCALE DRAWING.
3. DIMENSIONS BASED UPON ASME Y14.5M-1994
4. MAX. ALL MACH. SURFACES 125
5. DRAWING UNITS: U.S. INCH

USED ON: ME-407398

MATERIAL: SEE PARTS LIST ABOVE

**FERMI NATIONAL ACCELERATOR LABORATORY**
UNITED STATES DEPARTMENT OF ENERGY

PPD/MECHANICAL DEPT.
BTEV; PIXEL DETECTOR
CRYO ASSEMBLY

| SCALE | DRAWING NUMBER | SHEET | REV |
|---|---|---|---|
| HALF | 8918.120-ME-407399 | 1 OF 1 | C |

CREATED WITH : Ideas12NXSeries | GROUP: PPD/MECHANICAL DEPARTMENT