G P Yeh

1998-2003 member of IOC, ILC World Wide Studies

Co - Leader of 4th Concept , since co-initiating in 2005

ILC World Wide Studies

4 Concepts → **2 Detectors**

• GLD	SiLC	TPC	PFA
• LDC	SiLC	TPC	PFA
• SiD	Si		PFA
• 4th	SiLC	TPC	Dual Readout

• GLD + LDC		
SiLC	TPC	PFA
• ?	?	?

4th Concept Detector

Started @ Snowmass 8 / 2005

60 members **14** institutions **8** countries

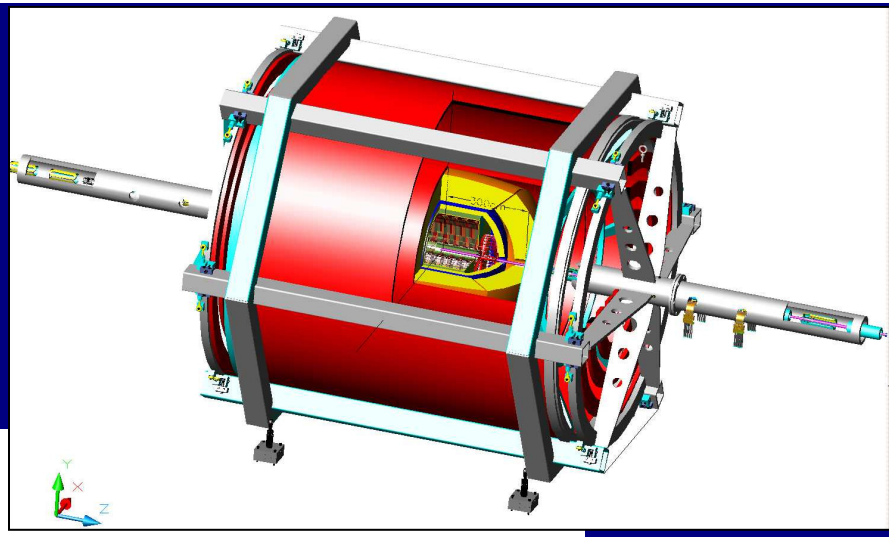

- **Vertex Pixel Detector**
- **SiLC + TPC** or **CluCou**
- **Picosecond TOF flavor tagging ?**
- **Dual Readout fiber calorimeter**

  Scintillation + Cerenkov (with TestBeam **data**)

  neutron (new)
- **Dual Solenoid iron-free Muon system**

C++ ILC root single framework

generation, simulation, reconstruction, analysis

ilc.fnal.gov/detector/rd/physics/detsim/**ilcroot**.shtml

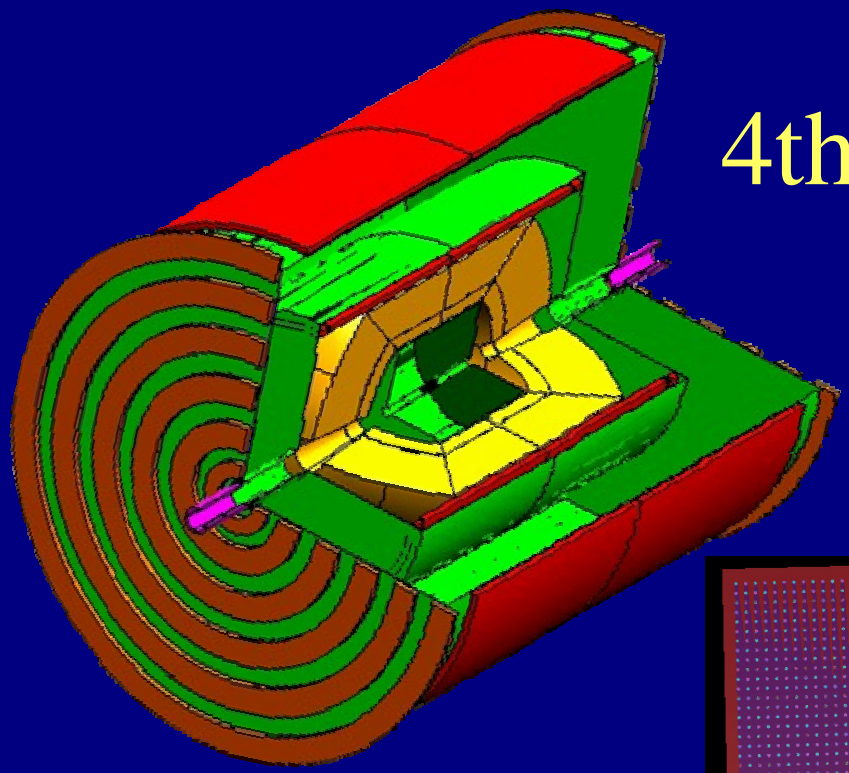

4th Concept
Detector for ILC

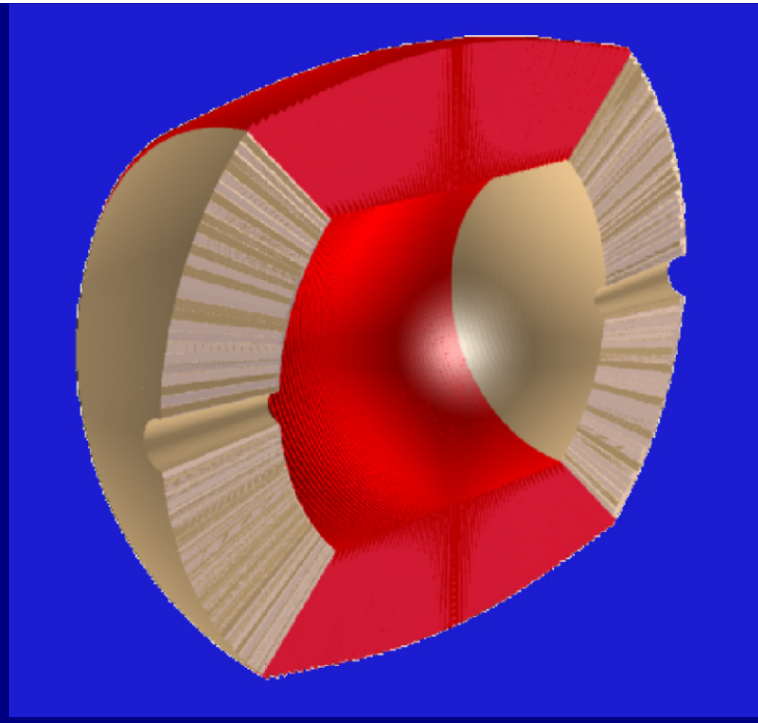

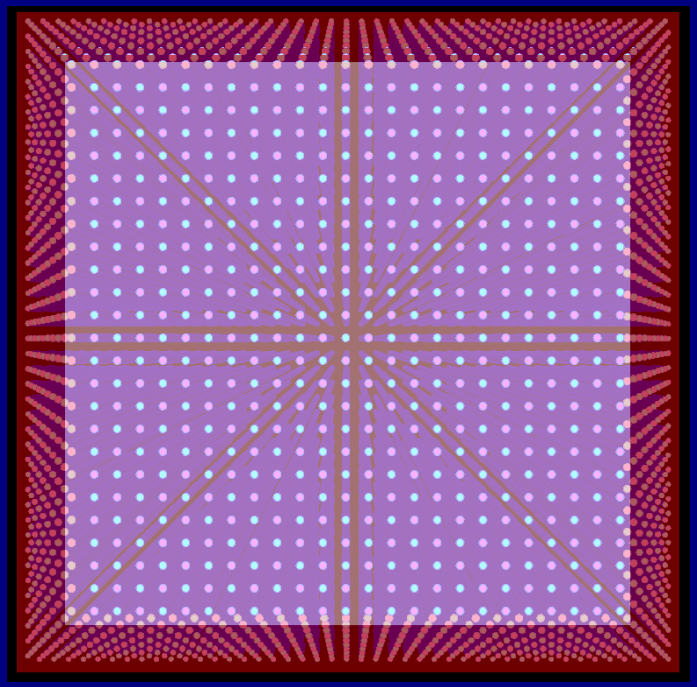

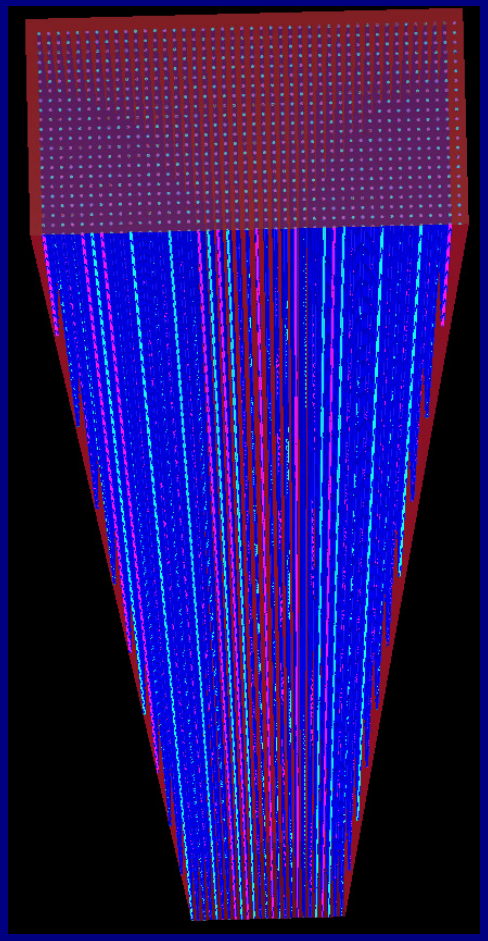

DREAM calorimeter

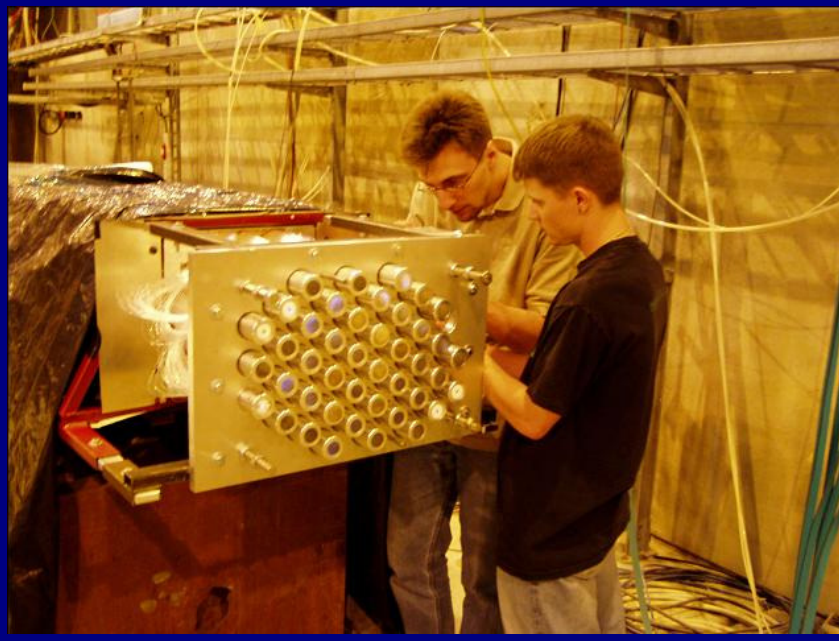

DREAM data 200 GeV π^- Energy response

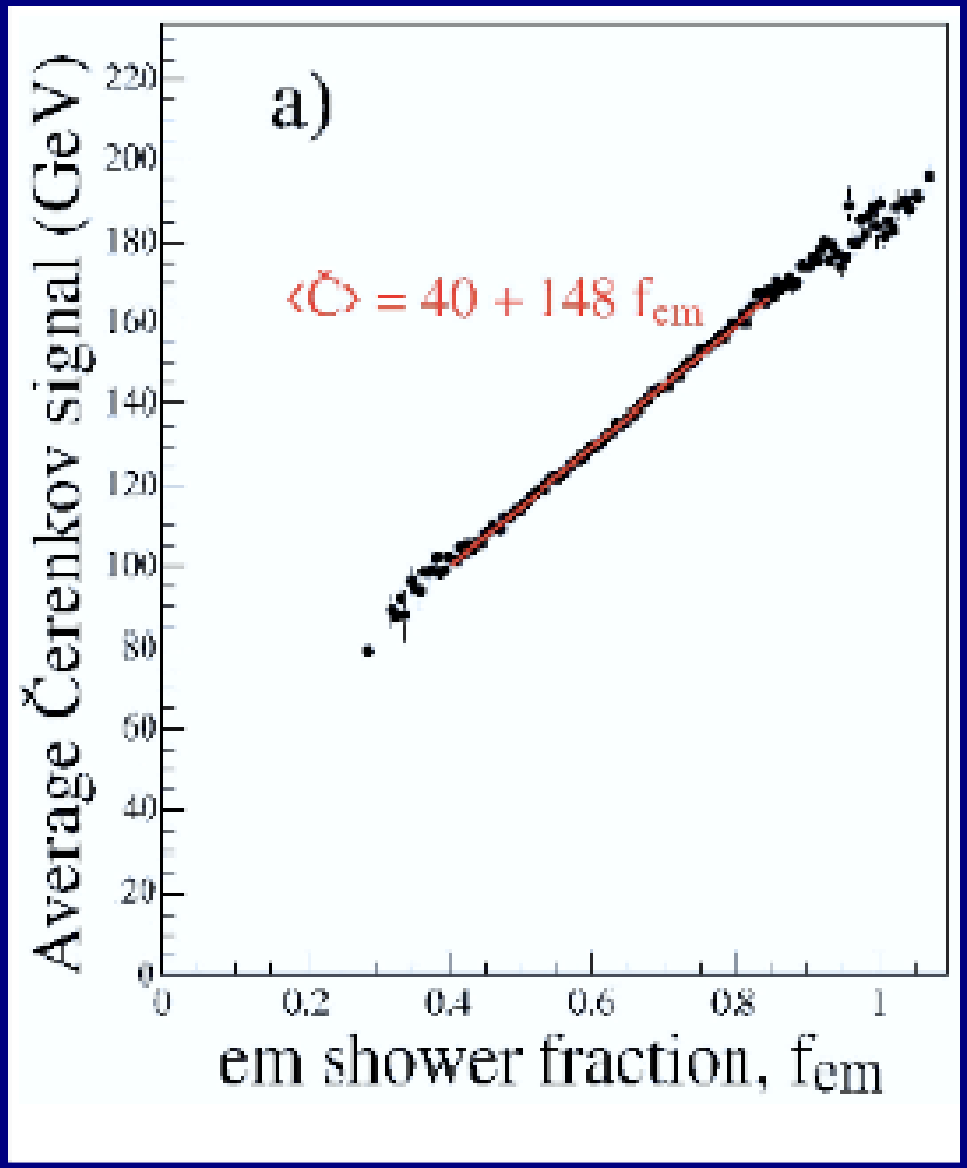

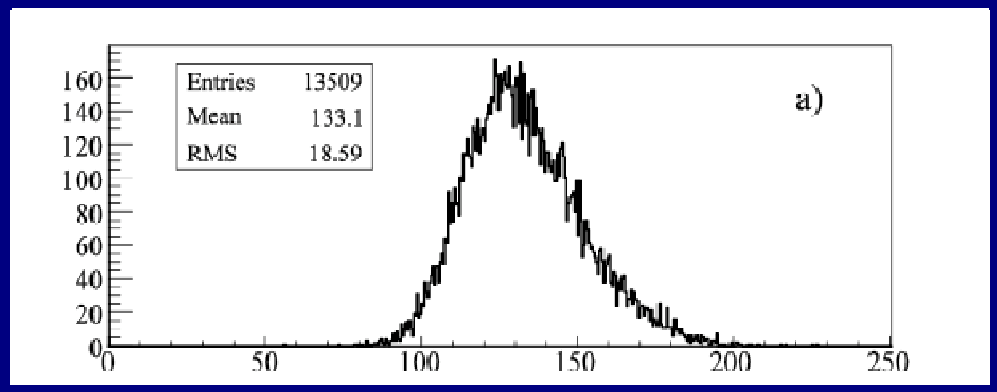

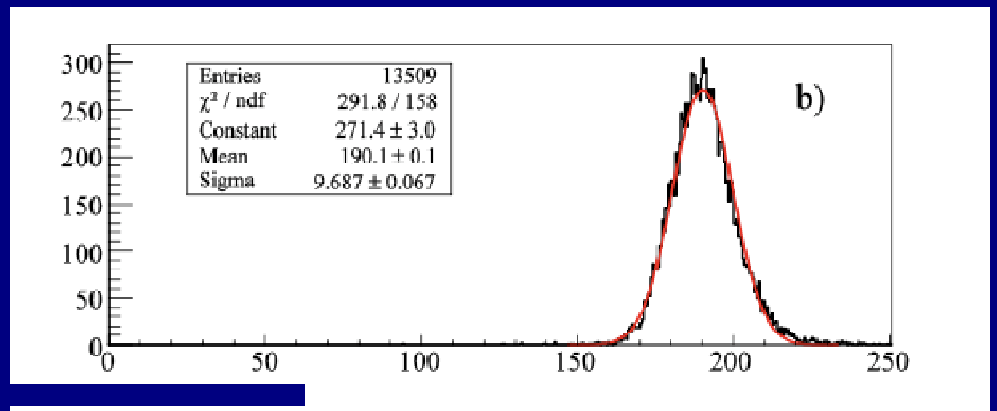

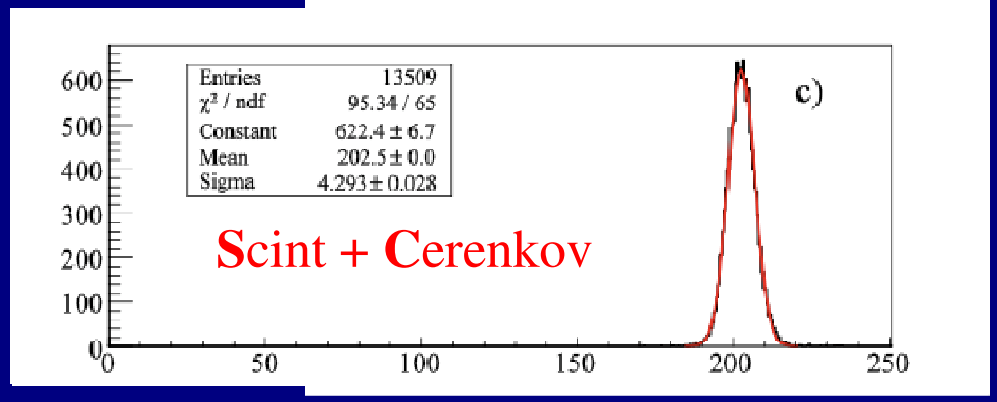

Data NIM A537 (2005) 537.

Hcal response with single π

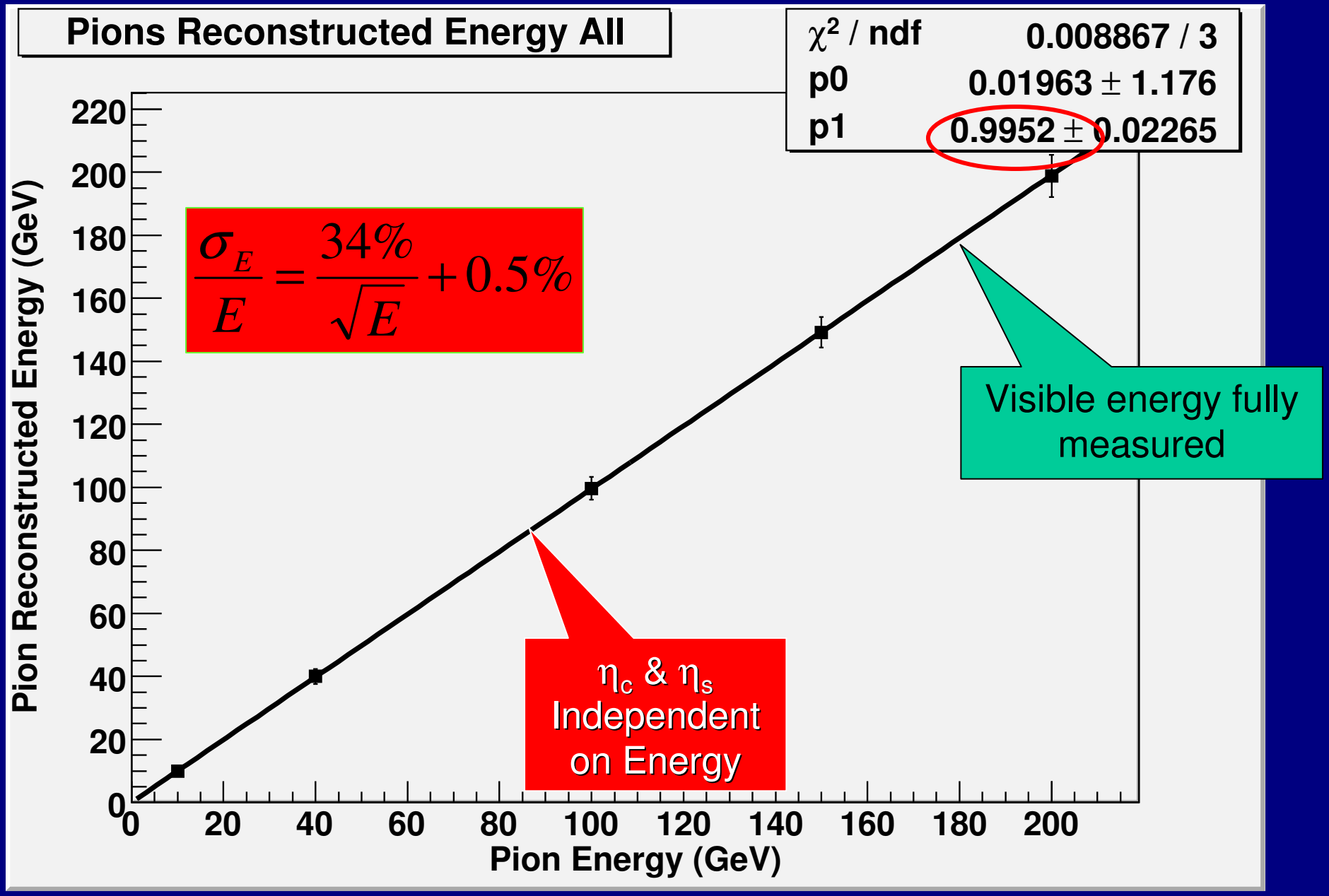

PID from Hcal

40 GeV particles

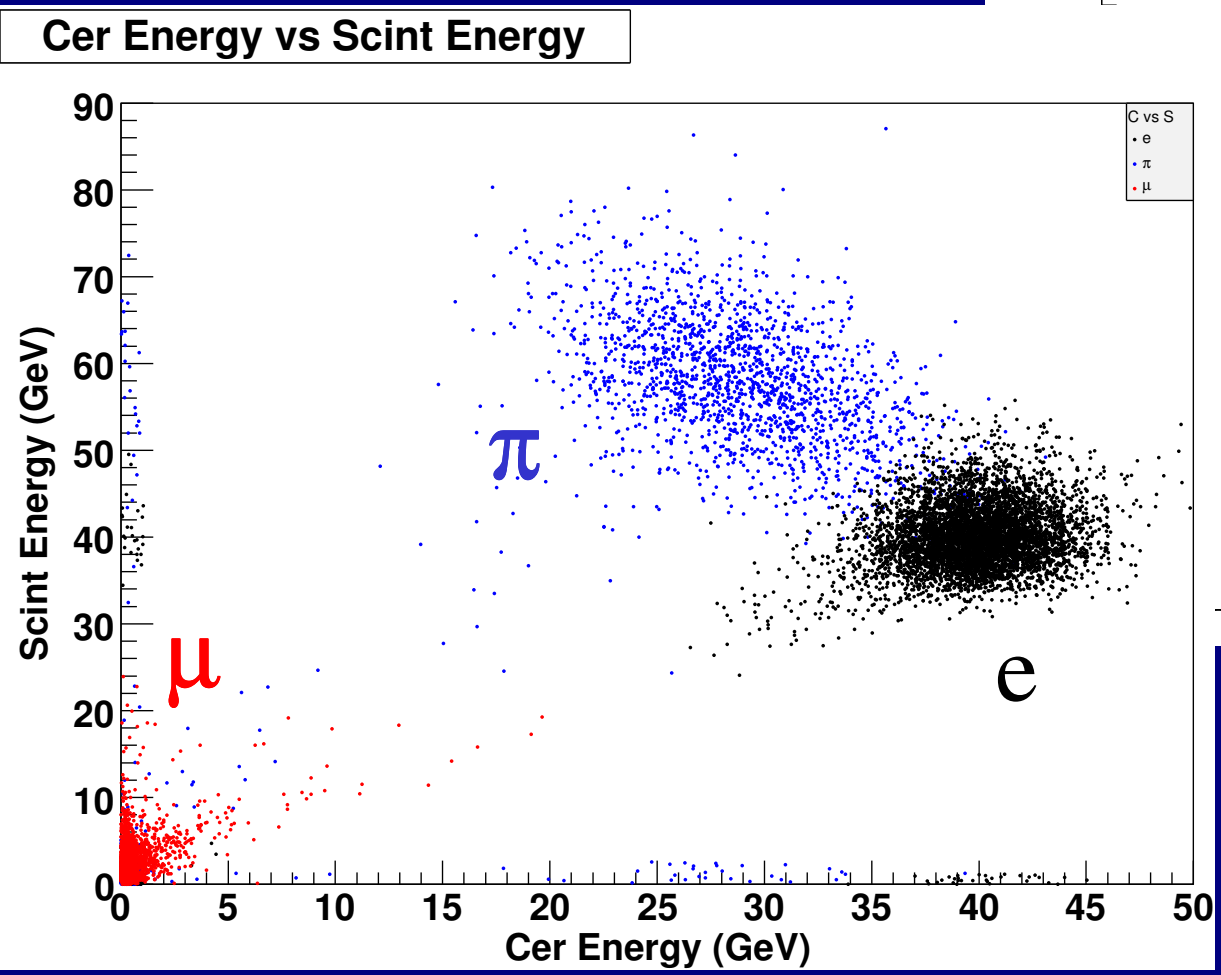

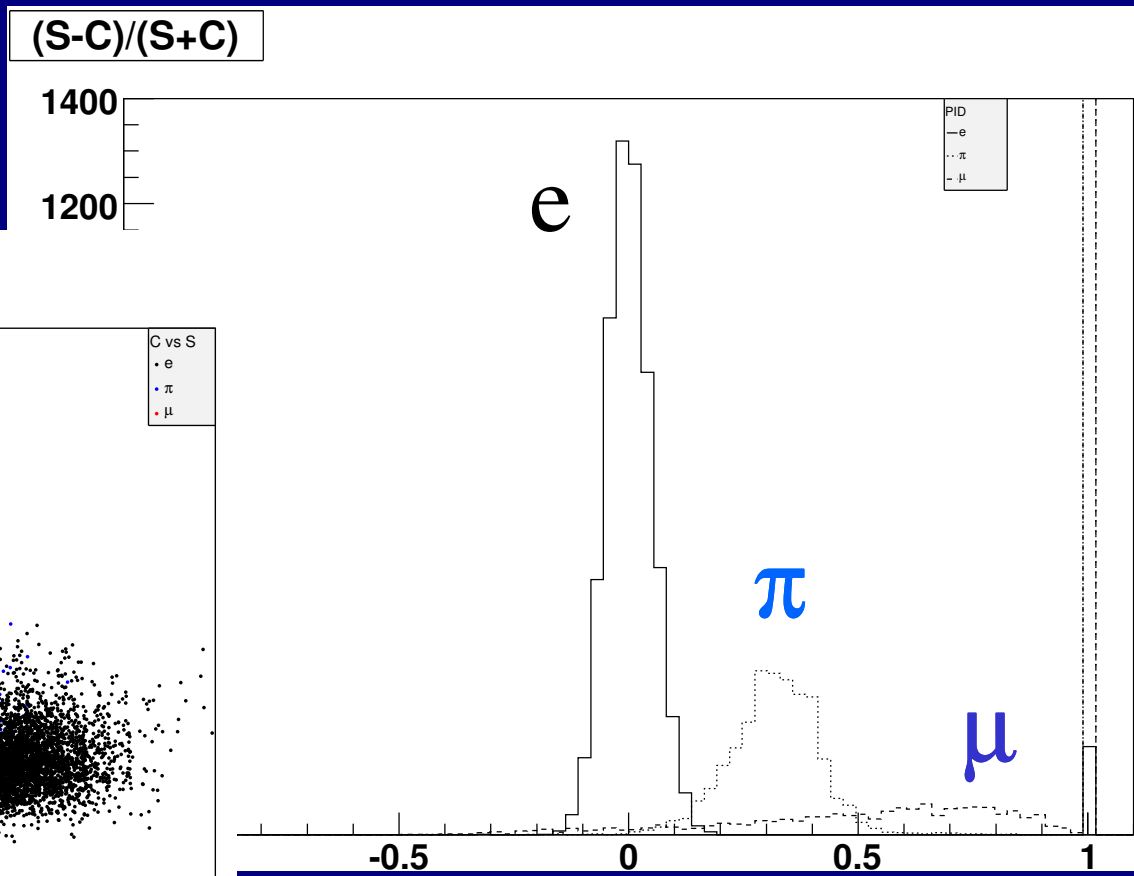

$$e^+e^- \rightarrow H^0 Z^0 \rightarrow W^+W^-\mu^+\mu^- \rightarrow jj \quad e^-\nu \quad \mu^+\mu^-$$

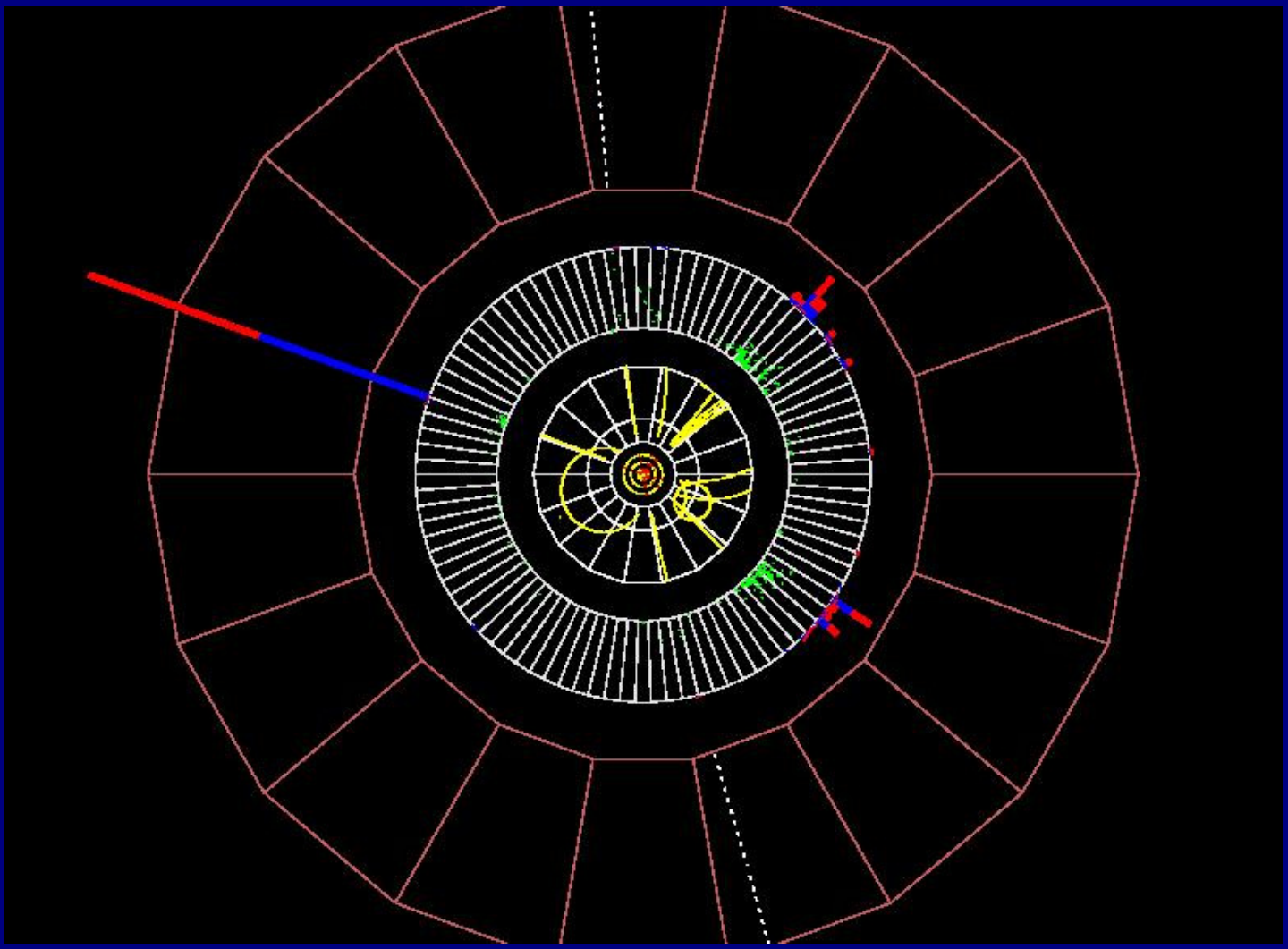

Illustrates the detectors of **4th** Concept … **particle ID** "obvious"

Jet Energy Resolution

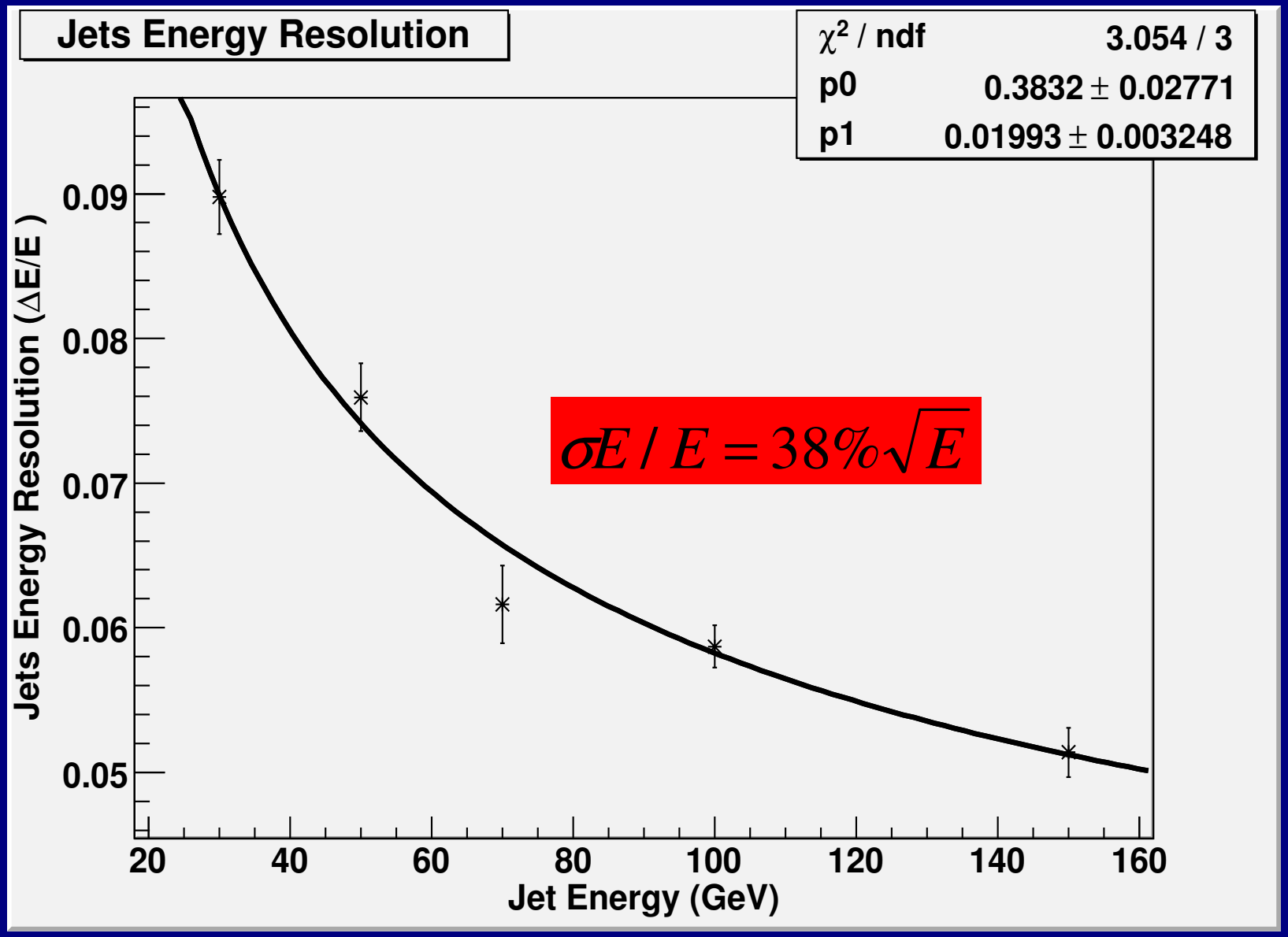

Ecal Resolution for 40 GeV e^-

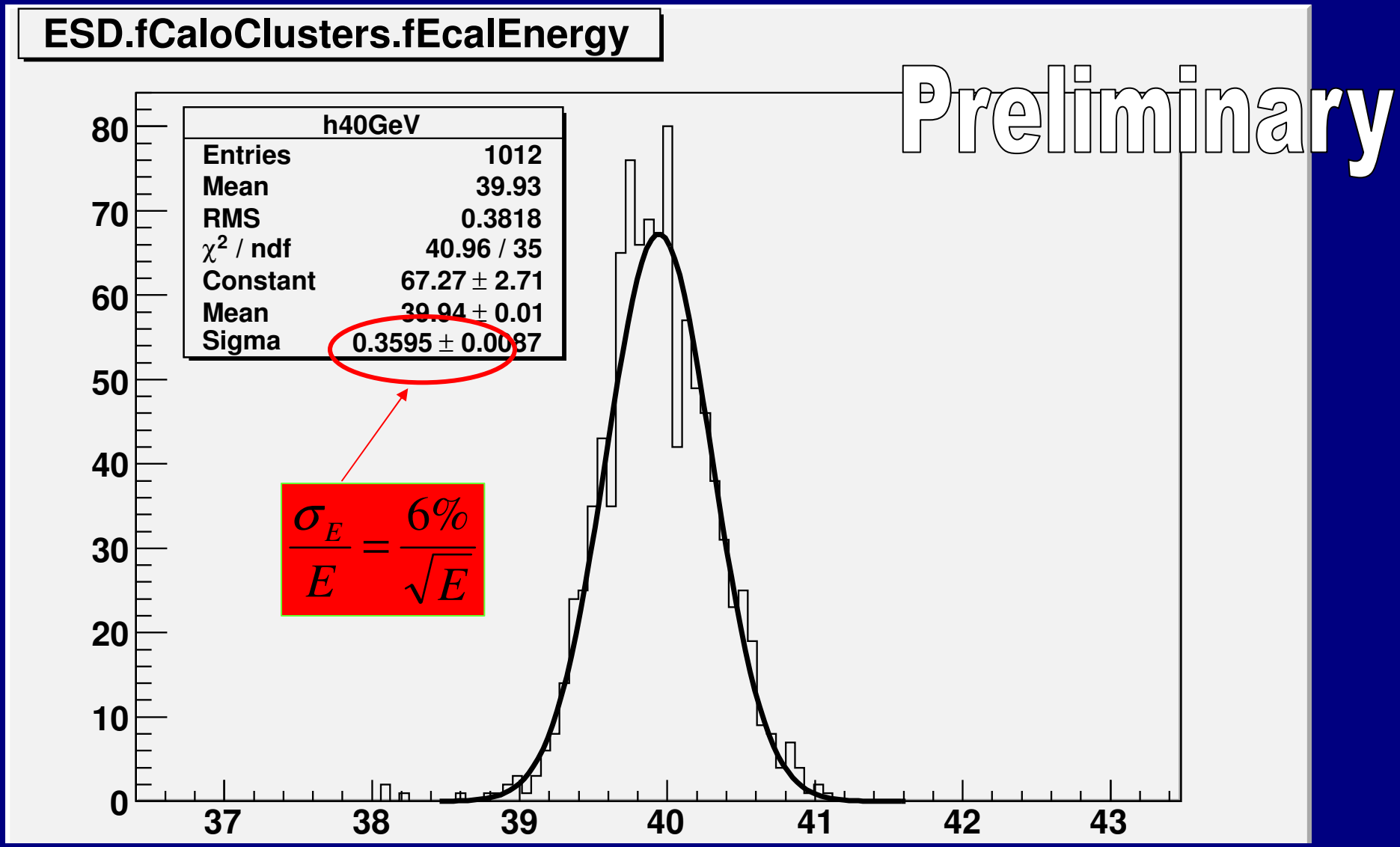

Ecal Dual Readuout Crystal

Resolution for π^o Ecal + Hcal

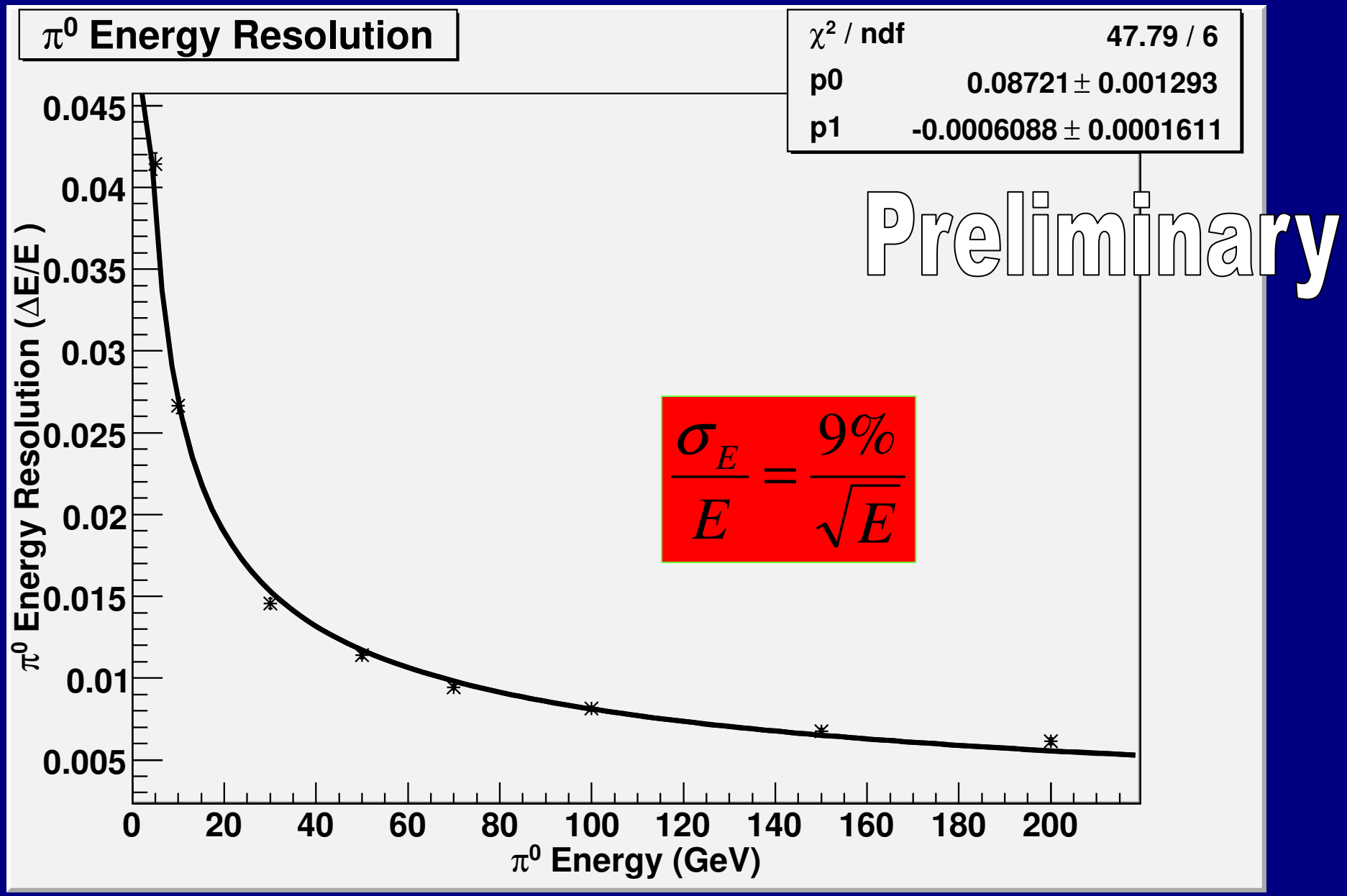

500 GeV dijets corrections possible

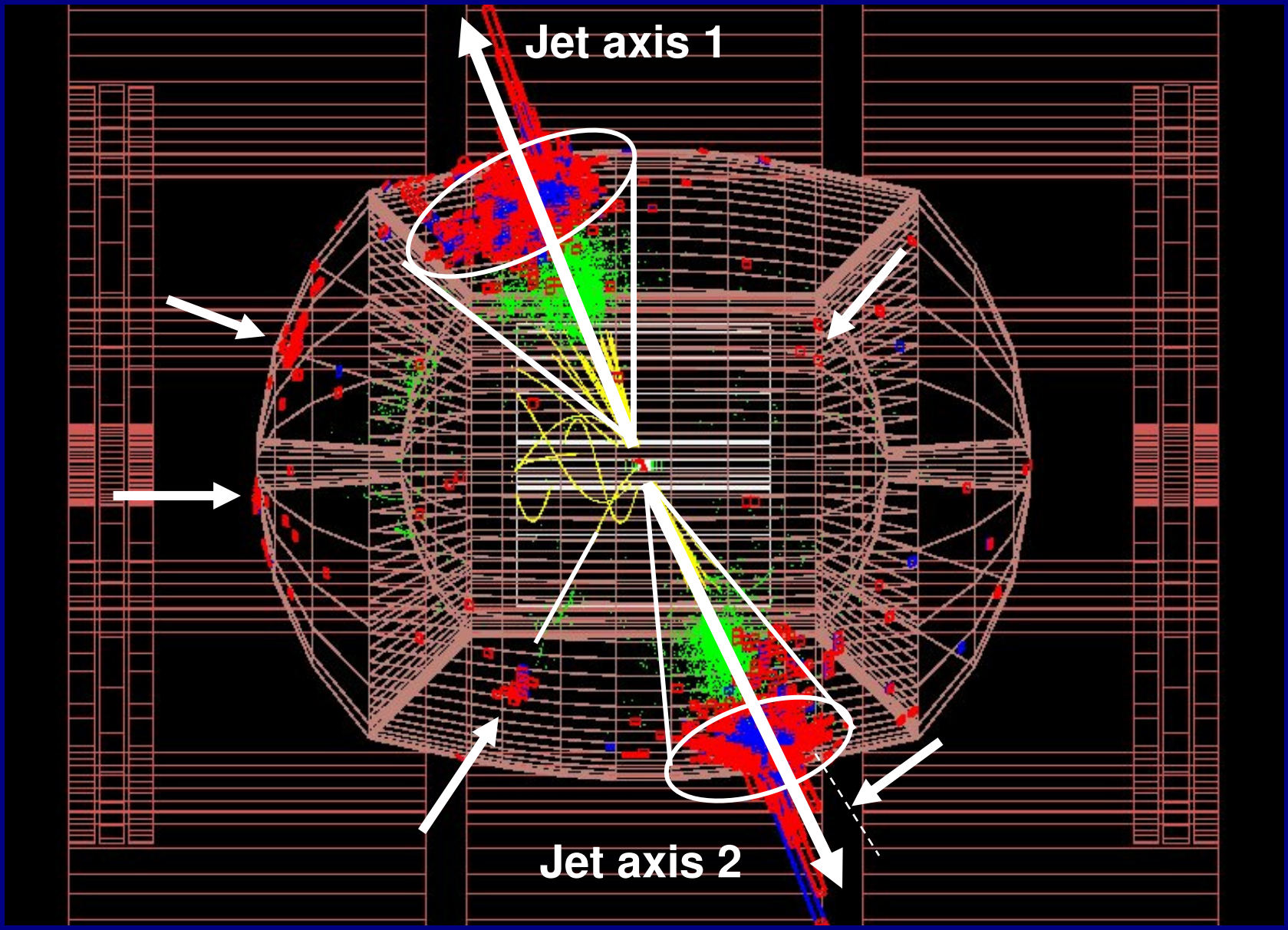

ILC Tracking Review :

concerns in all 4 concepts

* Forward Region especially
* SiD : only R-Phi, only 5 layers, pattern recognition ?

  power cycling (50kW, 5 Hz) w/ B = 5T
* TPC : end walls

ALCPG Workshop Oct. 2007, EDR by 2010

* Optimize Tracking, Dual Readout Calorimeter, Muon

  various combinations, simulations & physics studies
* 4th + SiD collaboration ?

SiD in ILCroot $e^+ e^- \rightarrow t^+ t^-$

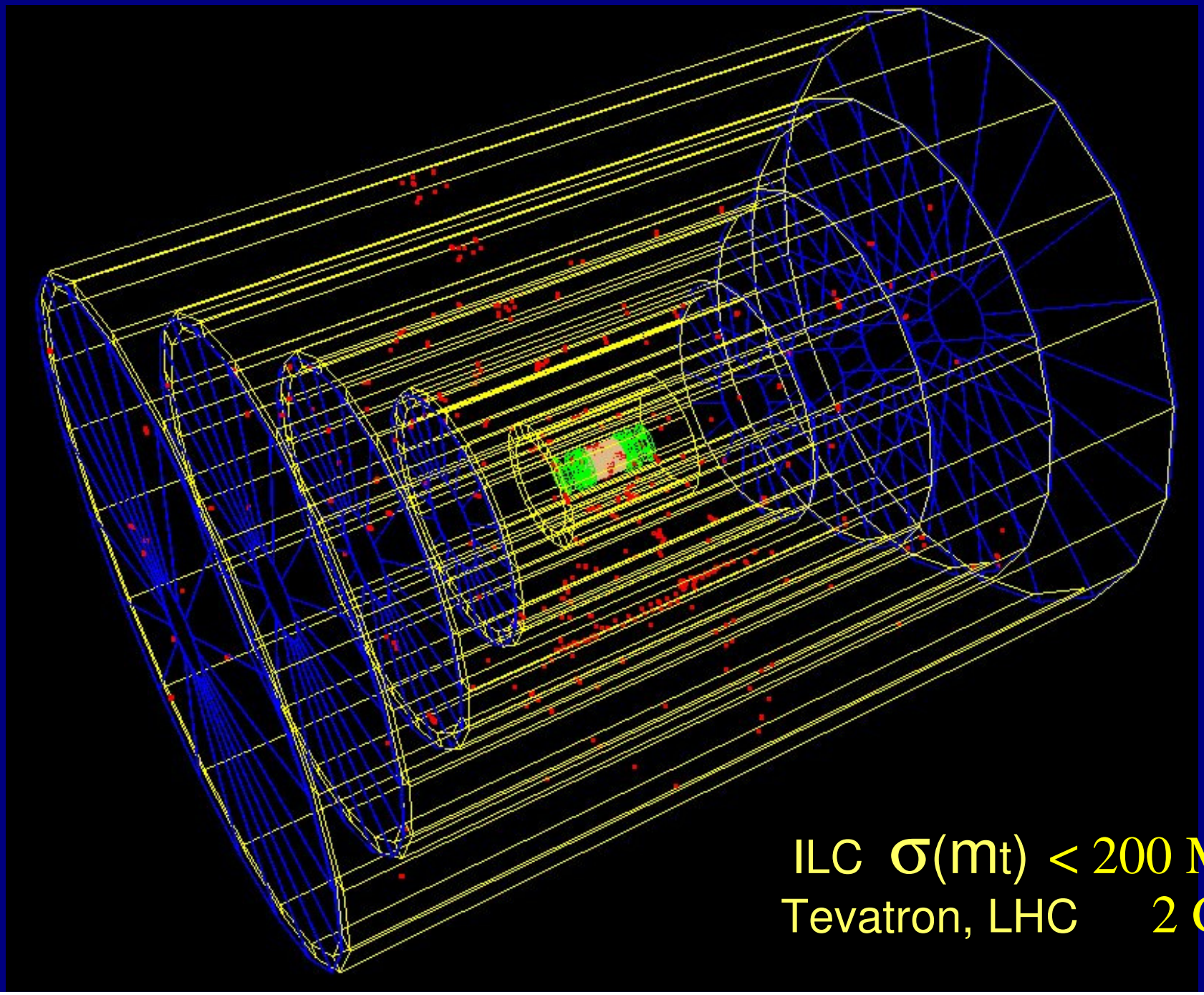

ILC Software Workshop Orsay May 2-4, 2007

ilcagenda.linearcollider.org/conferenceDisplay.py?confId=1446

Summary by Ties Behnke "The Way Ahead"

"We are duplicating efforts on **50%** of the needed functionality, and never get to attack the other **50%** because of lack of person power"

"LCIO Version 2 ? How shall we evolve LCIO:

ROOT as I/O package ?

home grown solutions ?

other solutions ? "

* LDC, GLD, 4th, CMS, Atlas, Alice, … all use C++
* Geant4 is also in C++

In discussions with many HEP colleagues, all agree :

the common language C++ & ROOT enable / facilatate

* Tevatron/LHC ILC comparisons & collaborations
* Tevatron/LHC colleagues to join ILC more easily

4 concepts are merging into 2 ILC detectors

LDC + GLD is expected to use C++ .

C++ (and English) should be the common language in the 2 ILC detectors.

Other languages could be additional / optional for colleagues who prefer them.

This would strengthen worldwide ILC collaborations & HEP.