Data Center Over-Temperature Shutdown System Overview

14 May 2009
Richard Kwarciany

Document ID: **CD-doc- 3211**

1 Introduction

This document provides a high level description of the Fermilab Data Center Over-Temperature Shutdown System (OTSS) to be used at GCC. This system provides a safety net to protect equipment in the data centers from activation of fire sprinklers due to high temperature caused by insufficient cooling conditions. When triggered by such conditions, the Over-Temperature Shutdown System will cause a main power disconnect for all non-safety related systems in the data centers. Emergency lighting, fire, and security systems are not connected to the Over-Temperature Shutdown System. The OTSS is scheduled to be installed at GCC in computer rooms B and C in mid calendar 2009. Due to increased complexity of installation in computer room A, installation in this room is tentatively planned to coincide with the next refit of computer room A.

2 System Description

The OTSS is designed to provide room temperature monitoring and automated power shutdown capability in each of the three computer rooms at GCC. The system consists of a primary subsystem and a backup subsystem to provide a high level of confidence that the system will function in an over-temperature situation. The system also has subsystem disconnect switches and trip indicator lights that allow the different subsystems to be tested without actually shutting down the power to the computer rooms. Each computer room at GCC will have its own independent OTSS.

2.1 Primary Over-Temperature Subsystem

The primary OTSS subsystem consists of an array of eight temperature sensors mounted in the ceiling area of the computer room. The sensors are placed approximately equidistant from each other and suspended from the ceiling to place the sensors at the same height as the installed sprinkler heads. These sensors are wired through conduit to a control panel in one of the adjacent rooms at GCC. The control panel contains a Liebert Site I/O module that digitizes the electrical signals from the temperature sensors and transmits this information via MODBUS to a SiteLink interface module. This allows the temperatures read to be displayed and logged remotely using the existing SiteScan system. The Site I/O module also senses the positions of all disconnect switches and relays in the system. This information can also be read remotely using SiteScan. Finally, the Site I/O module can drive a relay that powers the shunt-trip coils in the main power circuit breakers for the computer room. Firmware in the Site I/O module is programmed to power the shunt-trip coils and power down the room if a minimum number of temperature sensors reach their over-temperature set points. Note that the over-temperature power down function of the Site I/O module remains functional even if its MODBUS connection is non-functional.

2.1.1 Liebert Site I/O 16/16 Interface Module

This module is capable of sampling as many as sixteen inputs, and driving up to sixteen outputs, while interfacing to SiteScan via a MODBUS Sitelink connection. As installed, eight of the inputs are connected to temperature sensors, three are connected to the three diagnostic subsystem disconnect switches to sense their positions, and two inputs are connected to contacts on the two shunt-trip relays to sense their

positions. The temperatures and positions of the switches and relays can be read remotely through SiteScan. One of the outputs is connected to the control coil of a shunt-trip relay to allow the Site I/O module to cause a power disconnect to the computer room. Firmware in the Site I/O module is programmed to drive the shunt-trip relay if an over-temperature condition is detected. An over-temperature condition is defined as a preset number of sensors exceeding their over-temperature set points. Set points and number of sensors required to trip are parameters that are settable remotely through SiteScan.

2.1.2 Temperature Sensors

Temperature sensors used in the primary OTSS subsystem are RTD (Resistance Temperature Detector) type devices. An RTD is essentially a very fine piece of wire with a known temperature vs. resistance relationship. A small current is applied to the wire, and the voltage drop across it is measured to determine its temperature. RTDs were chosen over thermocouples due to their superior stability and accuracy over thermocouples. RTDs are also a cost effective choice.

The RTDs in use in the OTSS are designed for air temperature sensing and are manufactured by Omega Engineering Incorporated. Omega also provided the signal conditioner electronics for the sensors. The signal conditioners are mounted above each temperature sensor in the ceiling area of the computer room and convert the relatively small signal produced by the sensor into a more robust 4-20mA industrial standard current loop signal. 4-20mA signals can easily travel hundreds of feet over a relatively inexpensive cable, and are compatible with the Site I/O module's inputs without the need for a converter.

2.1.3 Shunt-Trip Relay

There are two main breakers feeding power to each computer room. Each breaker is equipped with a shunt-trip coil that is designed to trip the breaker when powered from an external source. Power to these coils is provided by the OTSS or the EPO system through power relays. The primary OTSS subsystem uses one relay, and the backup OTSS subsystem and EPO system use their own relay. The relays are connected to the shunt-trip coils such that either relay will trip both breakers.

The primary OTSS subsystem uses a multi-pole 110VAC relay with a low voltage control coil to allow the Site I/O module to shut down the computer room when an over-temperature condition is detected.

The secondary OTSS subsystem and the EPO system use a similar relay with a 110VAC control coil.

2.2 Secondary Over-Temperature Subsystem

The backup OTSS subsystem consists of an electromechanical thermostatic switch connected to the EPO (Emergency Power Off) shunt-trip relay. The EPO system allows main power to the computer room to be disconnected in an emergency by pressing either of two EPO switches mounted near the doors of the room. The thermostatic switch effectively acts as a third EPO switch.

This system is not controllable or monitorable remotely, but features a "Keep It Simple" design approach vs. the more sophisticated, but more complicated primary system.

2.2.1 Thermostatic Switch

The thermostatic switch in use is manufactured by Johnson Controls, and is a part designed for use in refrigeration systems. Its set point temperature is adjustable via a set screw over an appropriate range of temperatures. The thermostatic switch uses a capillary bulb temperature sensing device that moves a mechanical switch. This provides 110VAC to the control coil of the second shut-trip relay. Powering the coil of the relay causes power to be delivered to the shunt-trip coils in the main circuit breakers feeding power to the computer room.

2.2.2 Shunt-Trip Relay

A multi-pole 110VAC relay with a 110VAC control coil is used to allow the thermostatic switch to provide the power necessary to drive the shunt-trip coils in the main circuit breakers powering the computer room. There are two shunt-trip relays in the OTSS, one for each subsystem. The secondary OTSS shunt-trip relay is also controlled by the two EPO switches located near the doors of the computer room.

3 Design Considerations

Due to the large financial losses and long down time that would occur if an over-temperature event were to cause sprinkler heads to trip in the computer rooms, a highly reliable system with layered redundancy was desired. Other design requirements included a fail-safe design that minimized nuisance trips, and strategically placed disconnect switches and indicators to allow periodic testing of the system without powering off the computer room.

Initially a three tiered system with a local temperature display was considered, but the quoted cost of installation exceeded the $30K total system budget for each computer room by a significant margin. To meet the budget target, changes were made to the design. The local temperature display and one level of redundancy were eliminated, the number of temperature sensors was reduced, and the backup system was simplified.

The proposed primary subsystem featured a controller with a display to show instantaneous temperature measurements in the computer room. This subsystem also called for one temperature sensor to be placed near each sprinkler head for a total of 25 sensors. This subsystem was cut from the final design.

The total number of temperature sensors was also reduced to lower cost. Initially, it was planned to use one sensor per sprinkler head for the primary system, a smaller number of sensors for the secondary system, and as many as four sensors for the tertiary system. Even though the sensors themselves were not a large cost driver, the cost of installation and of the associated sensing electronics necessitated a reduction in total sensor count. The final design uses eight sensors for the primary subsystem, and one sensor for the backup subsystem.

As a final cost saving measure, the backup system was changed from an active system with four sensors and remote monitoring and control, to an electromechanical system with one sensor that is not remotely monitorable or controllable.

The final system meets the design goals of providing a highly reliable automated over-temperature shutdown system to protect equipment in the computer rooms at GCC, that fits within budget constraints. As added benefits, the new system also provides for remote room temperature monitoring and logging, and allows over-temperature trip conditions to be remotely configured.

4 System Schematic

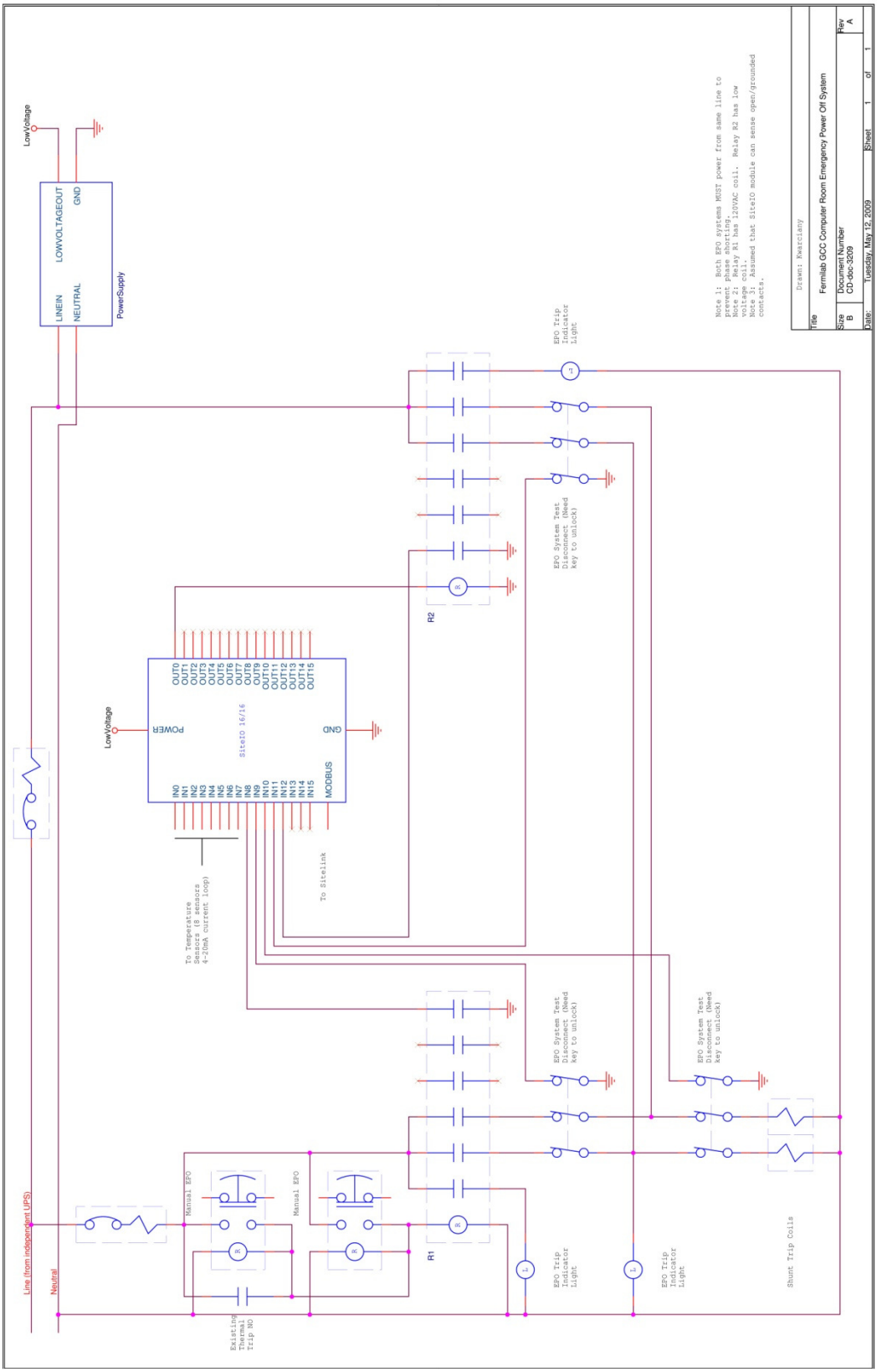

5 Component Data Sheets

5.1 Liebert Site I/O 16/16

EMERSON Network Power

Specification for SiteI/O 16/16

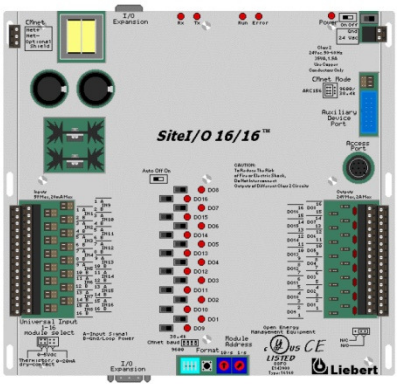

DESCRIPTION: The SiteI/O 16/16 is part of the SiteI/O-Line, which allows a complete SiteScan monitoring/control system to be built a piece at a time. It is a 32 bit microprocessor-based device designed to monitor up to sixteen analog, digital, and/or dry contact type signals, and control up to sixteen digital outputs. Digital outputs are controlled through custom programming that is defined by the user. The digital outout also have manual control or override capabilities through switched located on the module. Individual hardware jumpers set input signal-type selections. Screw terminal blocks are provided to terminate power, communication, and input signal wiring.

DIMENSIONS:	Module:	11 5/16" H x 11 5/16" W x 2 3/4" D 28.73 cm H x 28.73 cm W x 7 cm D
	Enclosure: (Painted Steel)	20" H x 18" W x 2.87" D 508mm x 457.2mm x 72.89mm
	See Enclosure Diagrams for mounting options.	
POWER:	24VAC ± 10%, 50-60 Hz., 35 VA power consumption (120/24VAC 40VA Transformer available)	
INPUTS:	Sixteen universal inputs, configurable for 0-5VDC, 0-20mA, or thermistor.	
OUTPUTS:	Sixteen digital outputs relay contacts rated at 2A resistive @24VAC. Configurable as normally open or normally closed.	
ENVIRONMENTAL OPERATING RANGE:	0° to 130° F (-17.8° to 54.4° C), 10 to 90% relative humidity, non-condensing	
COMMUNICATION:	(1) CMnet EIA-485 Port - Control Module network screw terminals Switch selectable baud rates ARC156 / 9600 or 38.4bps *Recommended wire is: MAGNUM Cable pn A3-ARC-156-2*	
	(16) Analog and/or Digital - screw terminals Jumper Selectable inputs Thermistor - 10k ohm @ 77° F, 25°C 0 to 5 VDC - 10k ohm max source impedance 4 to 20mA - 24VDC loop power, 250 ohm input	

Dry Contact - 0.5mA sense current
(16) Digital outputs

MEMORY: 1 MB Flash Memory, 1 MB Non-volatile, battery backed RAM.

PROTECTION: Voltage, current, and ESD protection on incoming power.

BATTERY: Seven-year lithium battery provides a minimum of 10,000 hours of data retention during power outages.

DIAGNOSTIC LED's:

Power:	Lights when power is being supplied to the module.
Tx:	Lights when the module transmits data over the CMnet
Rx:	Lights when the module receives data from the CMnet
Error:	Indicates an error within the SiteI/O 10/0
Run:	Indicates operating condition of the SiteI/O 10/0
Digital Output Status:	Lights when the digital output is activated.

LISTED BY: UL 916 (PAZX), cUL C22.2 No. 205-M19 (PAZX7), FCC Part 15 – Subpart B – Class A

MODULE DIMENSIONS AND LAYOUT

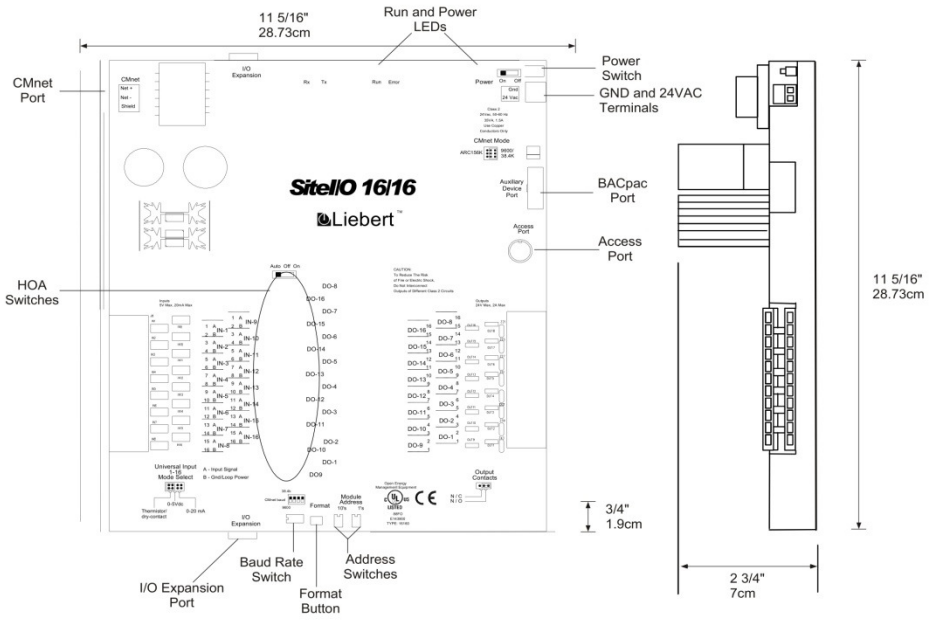

OUTPUT WIRING DIAGRAM

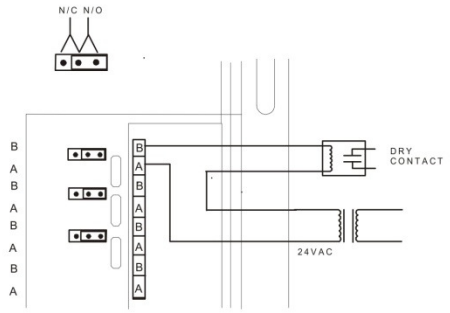

INPUT WIRING DIAGRAM

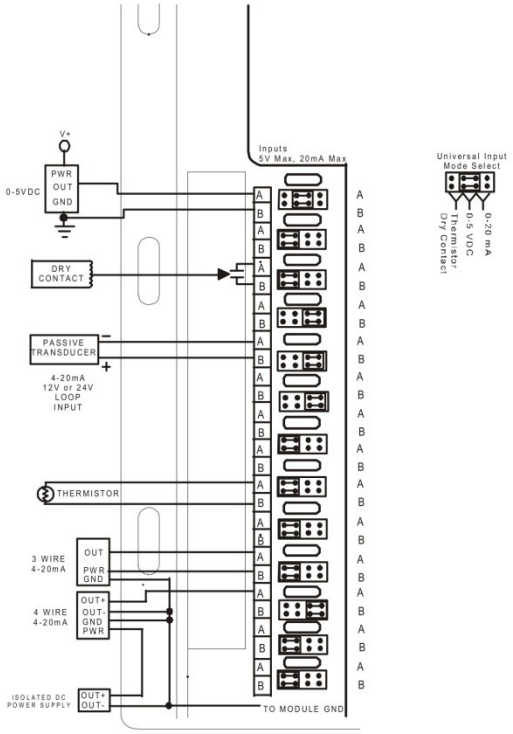

COMMUNICATIONS WIRING DIAGRAM

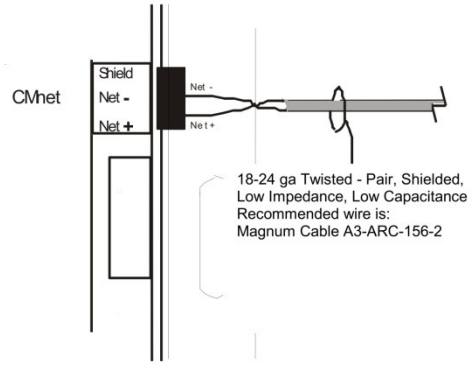

ENLOSURE DIAGRAMS

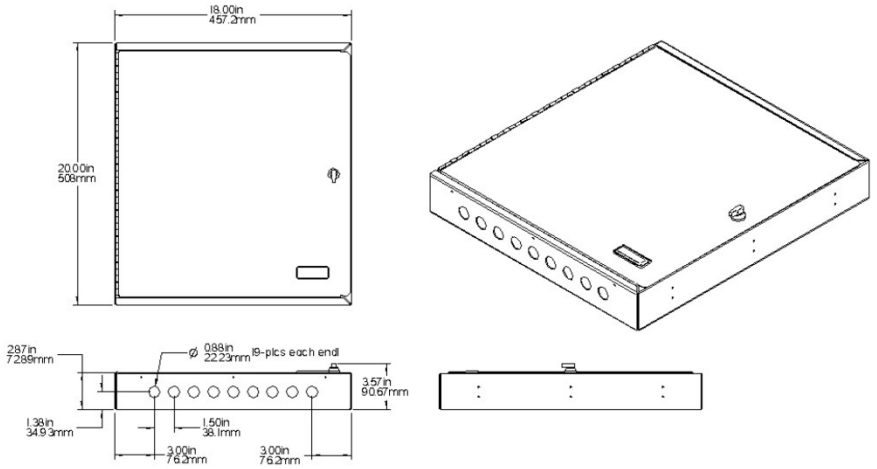

Enclosure Wall Mounting

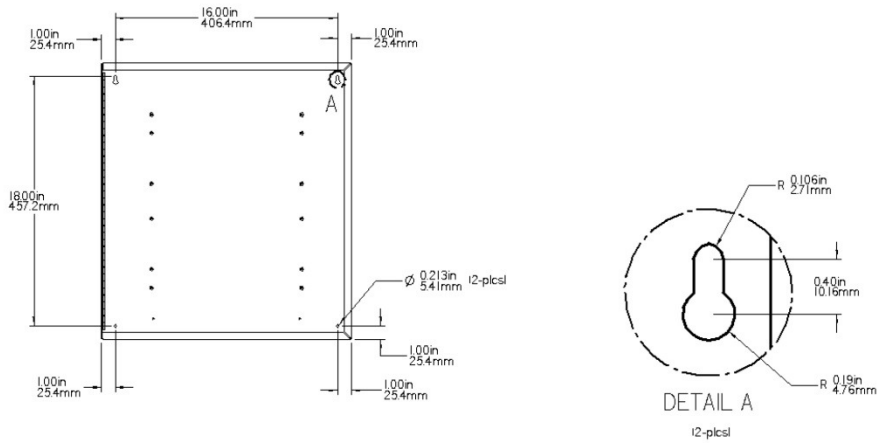

Enclosure Floor Mounting with Brackets

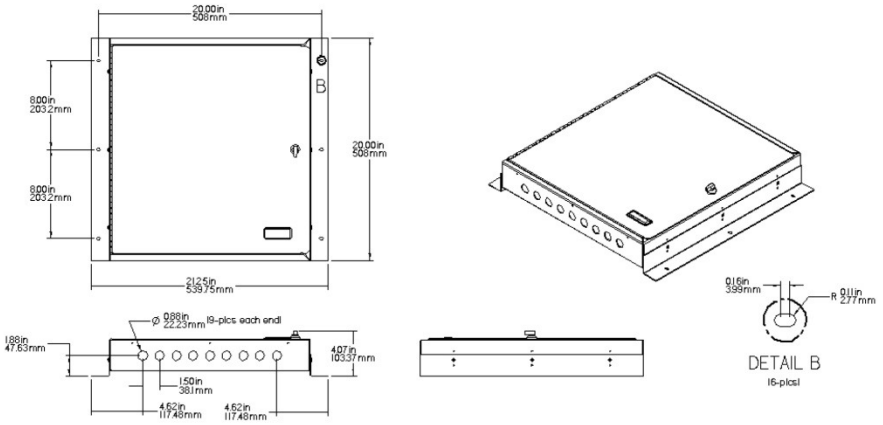

5.2 *Omega RTD-806 Air Temperature Sensor*

Air Temperature RTD Sensors

Starts at
$81

ACCURACY IEC CLASS A (±0.15°C @ 0°C)

- For Monitoring of Air and Gas Streams; Mounts in Any Orientation
- Exposed Sensing Element Has Fast Response Times in Air
- Available with Stainless Steel or Plastic Housings
- High-Accuracy, 100 Ω, Class "A" DIN Platinum Element
- 3-Wire Construction for Connecting to Most Instruments
- Perfect for Air Temperature Monitoring and Control in Laboratories and Laminar Flow Benches

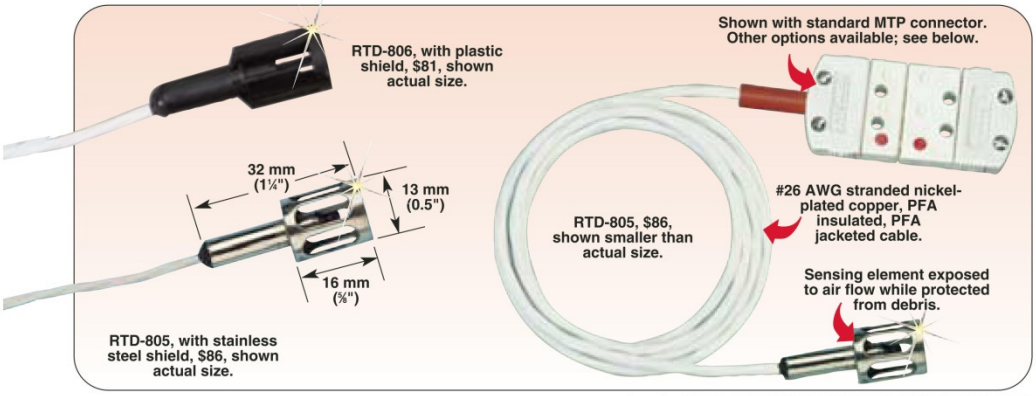

MOST POPULAR MODEL HIGHLIGHTED!

To Order *(Specify Model Number)*

Model Number	Sensing Element	Cable	Max Temperature	Price
RTD-805	100 Ω Class "A" DIN	1 m (40") PFA Insulated	230°C (450°F)	**$86**
RTD-806	100 Ω Class "A" DIN	1 m (40") PFA Insulated	230°C (450°F)	**81**

Terminations Available: *Provided with a miniature connector standard. For heavy-duty connector add* ***"-OTP"*** *to model number and* ***$7*** *to price. For audio connector add* ***"-TA3F"*** *to model number and* ***$17 to price.*** *For terminal lugs add* ***"-LUG"*** *to model number and* ***$4.50*** *to price.*
Ordering Examples: RTD-805-TA3F*, 100 Ω class "A" SST housing with terminal lugs, $86 + 17 =* ***$103.***

Popular Options Include:

SPRTX, Connector Transmitter, $75. See page N-7.

TA3F, Connector, $17. See page G-54.

CN77332, Series Controller, $229. See page P-37.

AD128, Portable Data Logger, $799. Visit omega.com

How are OMEGA's Model Numbers Constructed?

Termination Options: (Blank) = Miniature Connector (Standard)
OTP = Heavy-Duty Connector LUG = Copper Lugs
TA3F = Audio Connector:

Class "B" also available in economical 3-packs. See page C-38.

RTD — 805 — TA3F
RTD — 806 — LUG

Ordering Examples: *RTD-805-TA3F, $86 + 17 =* ***$103****. RTD-806-SPRTX(M1), $81+ 75 =****$156.***

C-75

5.3 Omega SPRTX Connector-Transmitter

Connector-Transmitter
for RTDs and Thermocouples
Replace Other Style Transmitters with a Connector-Transmitter

The Smart Connector™

SPRTX/STCTX Series Starts at $75

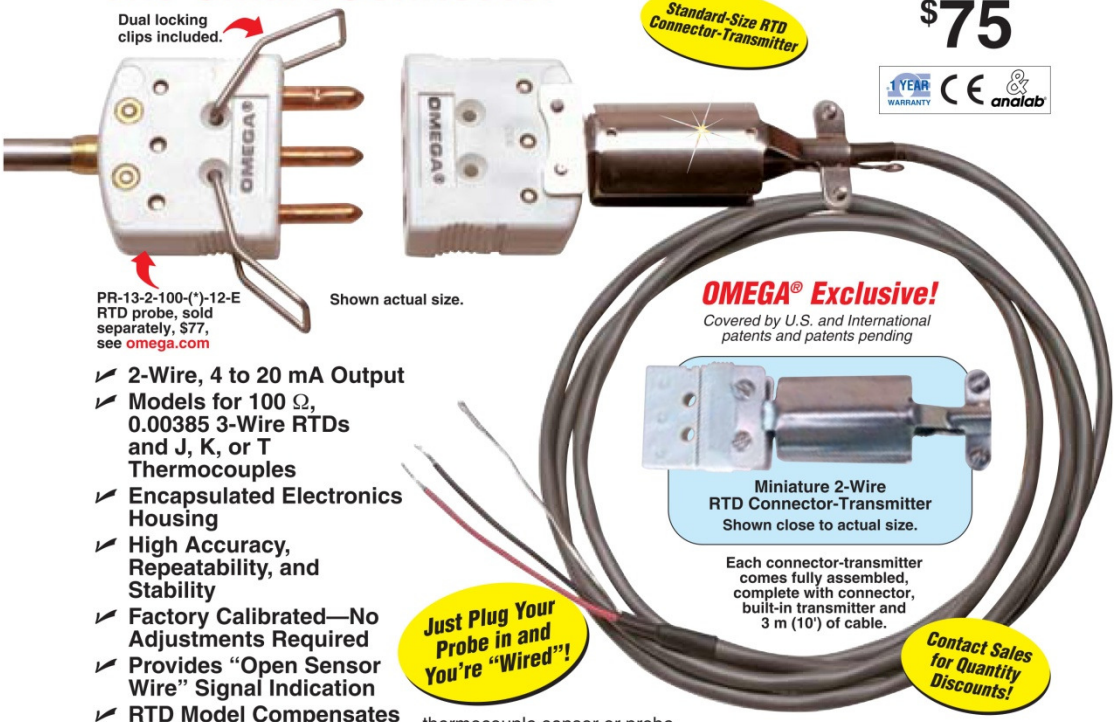

- **2-Wire, 4 to 20 mA Output**
- **Models for 100 Ω, 0.00385 3-Wire RTDs and J, K, or T Thermocouples**
- **Encapsulated Electronics Housing**
- **High Accuracy, Repeatability, and Stability**
- **Factory Calibrated—No Adjustments Required**
- **Provides "Open Sensor Wire" Signal Indication**
- **RTD Model Compensates for Long Lead Wires**

Loop Powered!

The OMEGA® 2-wire connector-transmitters are high-performance, low-cost, industrial RTD and thermocouple transmitters. Both feature an encapsulated micro miniature signal conditioner built into a patented connector housing. The SPRTX signal conditioner converts the resistive change of a 100 Ω, 0.00385 RTD sensor or probe across a dedicated temperature range into an industry-standard 2-wire, 4 to 20 mA analog output. The STCTX signal conditioner amplifies the non-linear millivolt output of a thermocouple sensor or probe across a dedicated temperature range, providing an amplified, industry-standard, 2-wire 4 to 20 mA analog output.

Specifications
SPRTX Series

Supply Voltage: 9 to 24 Vdc @ 30 mA max
Output: Linearized 4 to 20 mA
Accuracy: ±0.5% of FS @ 23°C (73°F) ambient
Repeatability: ±0.25°C (±0.5°F)
Temperature Effect: ±0.00022 mA/ °C (±0.00012 mA/°F)
Max Load: Rmax(Ω) = (Vsupply – 9 V)/0.02 A
Max Input Lead Resistance: 50 V
Transmitter Operating Temp: -40 to 85°C (-40 to 185°F)
Output Connection: 2-wire, shielded cable [3 m (10') included]
Approvals: CE marked
Weight: 110 g (0.25 lb) max with cable

UNIVERSAL CONNECTOR ON THERMOCOUPLE MODELS

Patented female connector fits both standard and miniature probe connectors.

"FITS ALL"

N-7

Two-Wire Transmitter Built into a Thermocouple Connector!

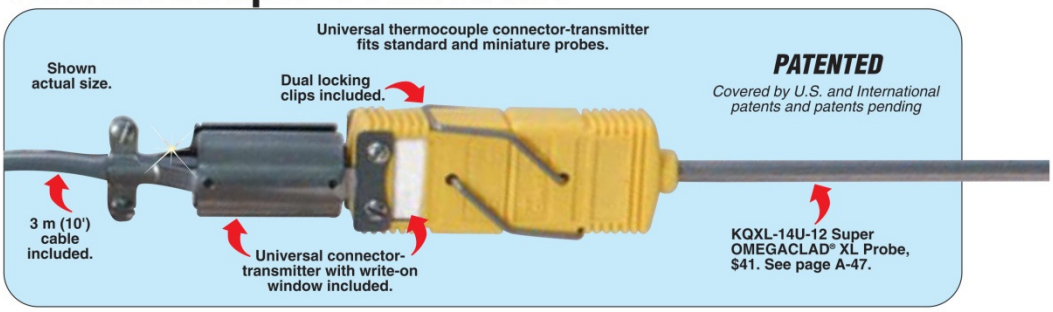

SPRTX Series for RTDs

Range:

SPRTX-M1, SPRTX-S1: -99 to 208°C (-146 to 406°F)
SPRTX-M2, SPRTX-S2: 2 to 569°C (36 to 1056°F)

Input: 3-wire, PT100 (a = 0.00385)

Open Sensor Wire Indication:

Leg 1: Open = 27 mA
Leg 2: Open = 2.2 mA
Leg 3: Open = 2.2 mA

Input Connection:

SPRTX-M1, SPRTX-M2: 3-prong miniature connector (MTP-U-F)
SPRTX-S1, SPRTX-S: 3-prong standard-size connector (OTP-U-F)

Dimensions:

SPRTX-M1, SPRTX-M2: 24 H x 18 W x 79 mm L (0.96 x 0.70 x 3.12")
SPRTX-S1, SPRTX-S2: 36 H x 18 W x 83 mm L (1.43 x 0.70 x 3.25")

STCTX Series for Thermocouples

Range by Model:

STCTX-J1, -K1, -T1: -18 to 121°C (0 to 250°F)
STCTX-J2, -K2: -18 to 538°C (0 to 1000°F)
STCTX-K3: -18 to 1093°C (0 to 2000°F)
STCTX-T2: -18 to 399°C (0 to 750°F)

Input: Thermocouple signal (ungrounded sensors only) Type J, K or T by model

Open Sensor Indication: 22 to 27 mA

Input Connection: Universal thermocouple connector (UST Series)

Supply Voltage: 9 to 24 Vdc @ 30 mA

Output: 4 to 20 mA (2-wire)

Accuracy: ±0.5% of full scale millivolt input @ 23°C (73°F) plus the non-linearity of the thermocouple type (Note: The STCTX does not compensate for thermocouple non-linearity)

Ambient Temp Effect: ±0.002 mA/°C

Max Loop Load: V = (Vsupply – 9 V)/0.020 A

Transmitter Operating Temp: -40 to 85°C (-40 to 185°F)

Approvals: CE marked

Output Connection: 2-wire shielded cable [3 m (10') included]

Response Time: 120 ms (0 to 63% FS)

Interfaces with Standard 4 to 20 mA Instrumentation

Model DPi8 shown smaller than actual size, $240, see omega.com

MOST POPULAR MODELS HIGHLIGHTED!

To Order *(Specify Model Number)*

Model No.	Price	Description
SPRTX-(*)1	$75	RTD connector-transmitter, range: -99 to 208°C (-146 to 406°F)
SPRTX-(*)2	75	RTD connector-transmitter, range: 2 to 569°C (36 to 1056°F)
STCTX-(**)	75	Thermocouple connector-transmitter, with universal connector

Accessories

Model No.	Price	Description
TX2-100	$28.50	2-conductor shielded cables, 30 m (100')
PSR-24S	60	Regulated power supply, 24 Vdc, 400 mA, screw terminal
PSR-24L	60	Regulated power supply, 24 Vdc, 400 mA, UL, stripped leads
PSR-24L-230	60	Regulated power supply, 24 Vdc, 400 mA, stripped leads, 230 Vac input, CE
CAL-3	75	NIST-traceable calibration with data
CAL-3-SYSTEM	125	CAL-3 calibration with probe

Note: *The SPRTX and STCTX Series are not for use in medical or nuclear applications, nor in flammable or explosive environments.*
Insert "M**" for miniature RTD connector or "**S**" for standard-size RTD connector.*
***Add range, J1, J2, K1, K2, K3, T1 or T2.*
Ordering Example: SPRTX-S2, *RTD standard size connector-transmitter with high temperature range,* ***PSR-24L*** *power supply, $75 + 60 =* ***$135.***

N

5.4 Johnson Controls A19AAF-12C Temperature Control Switch

JOHNSON CONTROLS PENN

Master Catalog 125
Temperature Controls Section A
Product Bulletin A19
Issue Date 0588

A19 Series Temperature Controls For Refrigeration With NEMA 1 Enclosure

Application

These controls are designed to cover a broad range of general purpose operating temperature control applications in the refrigeration, air conditioning and heating field with a minimum number of models. Typical applications are: frozen food cases, display cases, beverage coolers, milk coolers, walk-in boxes, water chillers, etc.

Various control ranges are available to cover working temperatures from -30 to 225°F (-35 to 105°C). Closed tank fittings and bulb wells are available for immersion applications.

Single-stage controls less enclosure and two-stage controls with or without enclosure also are available. Contact the nearest Johnson Controls office or contact Customer Service.

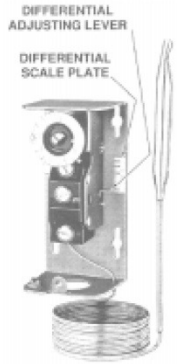

Fig. 1: Interior of an A19 with differential adjustment. Differential adjustment is concealed when cover is on control.

Specifications

Case Material		.062" (1.6mm) Cold Rolled Steel
Conduit Opening		7/8" Diameter Hole for 1/2" Conduit
Contact Unit		Snap-Acting Contacts In Dusttight Enclosure
Cover Material		.025" (0.6mm) Cold Rolled Steel
Finish		Gray Baked Enamel
Shipping Weight	**Individual Pack**	1 lb (0.45 kg)
	Overpack of 50	55 lb (25 kg)
Terminal Screws		No. 8–32 x 1/4" Binder Head with Cup Washers

Range and Differential Specifications

Range °F / °C	Differential °F / °C Adjustable	Standard (Fixed)	Close (Fixed)	Bulb Size in. / mm	Max. Ambient °F / °C (1)
–30 to 50	5 to 20	5	2.5	.375 x 4	140
–35 to 10	2.8 to 11.1	2.8	1.4	9.5 x 102	60
–30 to 100	3 to 12	3	1.5	.375 x 4	140
–35 to 40	1.7 to 6.7	1.7	0.8	9.5 x 102	60
–20 to 60	5 to 20	5	2.5	.375 x 4	140
–6 to 15	2.8 to 11.2	2.8	1.4	9.4 x 102	60
20 to 80	3.5 to 14	3.5	1.75	.375 x 5	140
–5 to 28	1.9 to 7.8	1.9	0.97	9.5 x 127	60
25 to 225	7 to 28	7	3.5	.375 x 3	275
–3 to 105	3.9 to 15.6	3.9	1.9	9.5 x 76	135
30 to 50	4 to 16	4	2	.375 x 2.625	190
0 to 10	2.2 to 8.9	2.2	1.1	9.5 x 67	88
30 to 110	3.5 to 14	3.5	1.75	.375 x 5	140
0 to 43	1.9 to 7.8	1.9	0.97	9.5 x 127	60
40 to 90	3.5 to 14	3.5	1.75	.375 x 6	140
5 to 32	1.9 to 7.8	1.9	0.97	9.5 x 152	60
50 to 130	3.5 to 14	3.5	1.75	.375 x 5	170
10 to 55	1.9 to 7.8	1.9	0.97	9.5 x 127	77

(1) Maximum bulb temperature which the element can withstand at infrequent intervals during life of control, such as shipping conditions. This is not the temperature which the control can withstand on repeat cycles. Maximum ambient temperature around control case is 140°F (60°C).

All Series A19 temperature controls are designed for use *only* as operating controls. Where an operating control failure would result in personal injury and/or loss of property, it is the responsibility of the installer to add devices (safety, limit controls) or systems (alarm, supervisory systems) that protect against, or warn of, control failure.

© 1988 Johnson Controls, Inc.
Code No. LIT-125020

Features

- Compact general purpose temperature controls with a wide selection of models.
- Dependability -- precision snap-acting contacts in dusttight enclosure and liquid filled sensing element are field proven.
- Precision "repeat" accuracy which is unaffected by barometric pressure and cross ambient temperature problems.
- Concealed differential adjustment discourages unauthorized adjustment changes.
- Extremely close differentials -- fixed or adjustable.
- "Trip-free" manual reset -- reset must be *pressed and released* before operation will resume. Contacts cannot be blocked in the closed position.

General Description

These compact controls are supplied with fixed or adjustable differential. Controls supplied with adjustable differential have an internal scale plate indicating increments of differential.

Knob range adjustment and visible scale are standard. Models are available with a knob for field convertible adjustment. These models are supplied with a snap-in plug in the cover for concealed screwdriver slot adjustment. A bulb mounting clip with sheet metal screw is supplied with remote bulb models. A special designed, field-proven liquid filled sensing element provides precision "repeat" accuracy which is unaffected by barometric pressure and cross ambient temperature problems.

Fig. 2: The A19 with external range adjustment.

The A19ACA and A19ADB controls lockout requiring that reset be pressed and released before operation will resume. All other controls in the series are automatic recycling.

Optional Constructions

Ambient Compensation

Available on fixed differential and manual reset models at extra cost, if required.

Capillary Length

Standard is 6 feet (1.8 m). Optional lengths are 10 feet (3m), 15 feet (4.6 m) and 20 feet (6.1m). Quantity orders.

Mounting Brackets

Optional at extra cost.

Electrical Rating Tables

Standard Differential

Volts, AC	120	208	240
Full Load Amps.	16.0	9.2	8.0
Locked Rotor Amps	96.0	55.2	48.0
Non-Inductive or Resistance Load Amps. † (Not Lamp Loads)	22 Amps. 120 to 277 VAC		
Pilot Duty — 125 VA, 24 to 600 VAC			

†SPST rating

Standard Differential With Lockout

Volts, AC	120	208	240
Full Load Amps.	16.0	9.2	8.0
Locked Rotor Amps.	96.0	55.2	48.0
Non-Inductive or Resistance Load Amps. (Not Lamp Loads)	16.0	9.2	8.0
Pilot Duty — 125 VA, 24 to 600 VAC			

Close Differential

Volts, AC	120	208	240
Full Load Amps.	6.0	3.4	3.0
Locked Rotor Amps.	36.0	20.4	18.0
Non-Inductive or Resistance Load Amps. (Not Lamp Loads)	10 Amps. 24 to 277 VAC		
Pilot Duty — 125 VA, 24 to 277 VAC			

Packing Nut

Part No. FTG13A-600R is available for closed tank applications where the temperature does not fall below -35°F (-37°C) or exceed 250°F (121°C). Maximum liquid pressure limit is 150 psig (1034 kPa). For applications where the temperature or liquid pressure exceeds these limits specify Style 4 element with all metal packing nut as an integral part of the control.

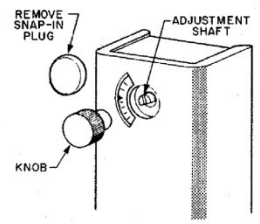

Fig. 3: Drawing showing snap-in plug removed and the knob in line to assemble. Press the knob onto the slotted shaft

Range Adjuster

Screwdriver slot with visible scale or screwdriver slot with internal scale and solid cover optional at no extra cost (quantity orders only). Models are available with a knob for field convertible adjustment and a remote bulb mounting clip. This provides conversion to knob, concealed screwdriver slot or external screwdriver slot adjustment.

Example: Type A19ABC is a remote bulb temperature control with NEMA 1 enclosure, adjustable differential, SPDT contacts and standard differential (1 hp). All combinations of the above letters or Types are not necessarily available. Contact Customer Service at 1-800-ASK-JNSN.

Repairs and Replacement

Field repairs must not be made. For a replacement control contact the nearest Johnson Controls wholesaler.

Type Number Chart

A19	A			Remote bulb, NEMA 1
	B			Integral bulb, NEMA 1
		A		Fixed differential
		B		Adjustable differential
		C		Lockout on low
		D		Lockout on high
			A	Open low, standard differential
			B	Open high, standard differential
			C	SPDT, standard differential
			D	Open low, close differential
			E	Open high, close differential
			F	SPDT, close differential

Ordering Information

1. To order, specify Product Number if available.
2. Where Product Number is not available, specify Type Number and the following:
   a. Range required.
   b. Style of element.
   c. Manual reset, if needed.
   d. Length of capillary, 6 feet (1.8 m) is standard.
   e. Ambient compensation, if required.
   f. Type of adjustment, knob, screwdriver slot, concealed or factory sealed.
   g. Fixed or adjustable differential.
3. Specify bulb well, if required, by Part Number.
4. Specify packing nut, Part Number FTG13A-600R, if required for style 1 bulb with support tube.

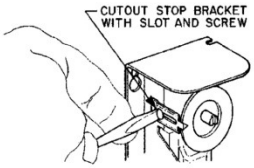

Fig. 4: The controls have a screw type cutout stop. The stop screw must be loosened and moved to the stop setting desired. Tighten screw after setting is made.

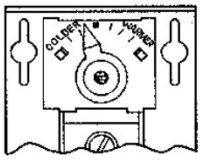

Fig. 5: Concealed range adjustment furnished on milk cooler controls: 30 to 50°F (0 to 10°C) range. Available on other models on quantity orders.

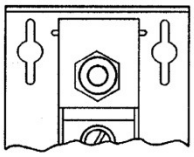

Fig. 6: Factory sealed setting -- optional at no extra cost on quantity orders.

Fig. 7: Style 1 drawn bulb.

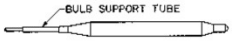

Fig 8: Style 1 swaged bulb with support tube. (Add FTG13A-600R packing nut to Style 1 swaged bulb when used in closed tank.)

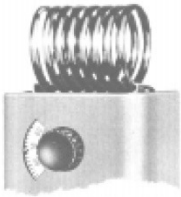

Fig. 9: Style 3 element attached to the case.

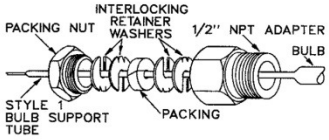

Fig. 10: Part No. FTG13A-600R packing nut assembly. (Use with Style 1 bulb with support tube for direct immersion applications.)

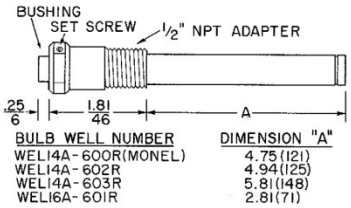

Fig. 11: Bulb well for liquid immersion applications where a temperature bulb may be removed without draining the tank.

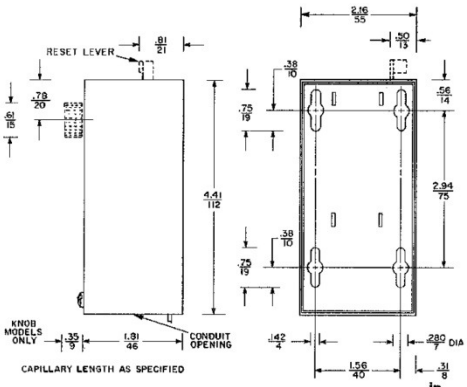

A19 Dimensions $\frac{\text{in.}}{\text{mm}}$

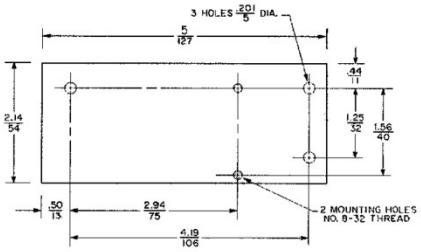

Optional Mounting Bracket Dimensions $\frac{\text{in.}}{\text{mm}}$

Performance specifications appearing herein are nominal and are subject to accepted manufacturing tolerances and application variables.

Controls Group
507 E. Michigan Street
P.O. Box 423
Milwaukee, WI 53202

Printed in U.S.A.