Fermilab

Directorate

MEMORANDUM OF UNDERSTANDING

E961

COUPP: A Search for Dark Matter with a Continuously Sensitive Bubble Chamber

25 September, 2008

INTRODUCTION 3

I. PERSONNEL AND INSTITUTIONS: 8

II. EXPERIMENTAL AREA, BEAMS AND SCHEDULE CONSIDERATIONS 8

III. RESPONSIBILITIES BY INSTITUTION - NON FERMILAB 9

IV. RESPONSIBILITIES BY INSTITUTION - FERMILAB 9

4.1 Fermilab Accelerator Division

4.2 Fermilab Particle Physics Division

4.3 Fermilab Computing Physics Division

4.4 Fermilab ES&H Section

V. SUMMARY OF COSTS 11

VI. SPECIAL CONSIDERATIONS 12

SIGNATURES 13

APPENDIX I - HAZARD IDENTIFICATION CHECKLIST 14

APPENDIX II - DESIGN OF 60 KG DETECTOR 15

APPENDIX III - LOCATION OF THE EXPERIMENT IN THE MINOS HALL 16

APPENDIX IV - SAFETY ISSUES SURROUNDING THE USE OF CF3I 17

INTRODUCTION

The experimenters will construct and operate a 60-kg room temperature CF_3I bubble chamber as a prototype dark matter (WIMP) detector. Operating in weakly-superheated mode, the chamber will be sensitive to WIMP induced nuclear recoils above 10 keV, while rejecting background electron recoils at a level approaching 10^{10}. The experimenters would first commission and operate this chamber in the MINOS near detector tunnel with the goal to demonstrate stable operation and measure internal contamination and any other backgrounds. This chamber, or an improved version, would then be relocated to an appropriate deep underground site such as the Soudan Mine. This detector will have unique sensitivity to spin-dependent WIMP-nucleon couplings, and even in this early stage of development will attain competitive sensitivity to spin-independent couplings.

This memorandum is intended solely for the purpose of providing a work allocation for Fermi National Accelerator Laboratory and the participating universities and institutions. It reflects an arrangement that is currently satisfactory to the parties involved. It is recognized, however, that changing circumstances of the evolving research program may necessitate revisions. The parties agree to negotiate amendments to this memorandum to reflect such revisions. This MOU and E961 relates only to preparations for operation in the MINOS near detector tunnel.

MOTIVATION

There is by now a large body of evidence to support the widely accepted proposition that most of the matter of our universe is cold, dark, and non-baryonic. Supersymmetry provides an abundance of candidates which could account for the dark matter as a relic population of neutral, weakly interacting, massive particles or "WIMPS." The direct observation of WIMP interactions in the laboratory would provide a decisive confirmation of this picture of our universe.

Many of the essential features of a terrestrial direct detection experiment are determined not by the specific model of dark matter, but by the mass distribution of our galaxy's dark matter halo. A detector orbiting the Milky Way galactic center at a radius of 8 kpc would be expected to encounter a flux of dark matter particles with a density of 0.3 GeV/cm^3 and a typical velocity of ~300 km/sec. It is this typical collision velocity which dictates that nuclei recoiling from elastically scattered dark matter particles will have recoil kinetic energies on the order of tens of keV for the expected WIMP mass range from a few GeV to ~1 TeV.

Because the recoil energies are so small, the first and most obvious experimental challenge for direct detection is to develop a technology that can discriminate rare nuclear recoils from the abundant electron recoils arising from natural radioactivity. A detector which can unambiguously identify nuclear recoils must then be able to deal with the next tier of backgrounds which consists of actual nuclear recoils induced by neutrons from a variety of sources, and also includes the α-decays of U and Th and their daughters. Each detector technology that has been brought to bear on the dark matter problem has employed some combination of intrinsic detector background rejection, shielding, and operation in a deep underground site to address these background issues.

This experiment addresses a detector technology which the experimenters believe to be the most promising candidate for a dark matter detector that will work at the ton scale. The detector will be

a *continuously (albeit moderately) superheated* bubble chamber, operated below the threshold for sensitivity to minimum ionizing particles. The idea is simple. The threshold for bubble nucleation in a superheated liquid is a strong function of temperature and pressure. A judicious choice of operating parameters will result in a bubble chamber that is sensitive to nuclear recoils but blind to minimum ionizing particles, γ, and β interactions. The experimenters have demonstrated that a CF_3I bubble chamber can be operated with a gamma rejection factor of $3x10^9$ at a nuclear recoil threshold of 10 keV. This gamma rejection is roughly five orders of magnitude beyond what has been demonstrated by CDMS.

A major virtue of bubble chamber technology is its mechanical simplicity which lends itself to clean construction and scalability to larger devices. The detector consists only of a quartz bell jar, a stainless steel diaphragm/lid, seals, and highly purified fluids. All of these materials are amenable to purification or cleaning, and the experimenters are confident that they will be able to attain the extraordinary degree of radio-purity necessary to advance dark matter limits. The experimenters have successfully operated a 1 liter (2 kg) CF3I bubble chamber in continuously sensitive mode for nine months, and see no technical obstacles to building considerably larger and cleaner devices.

An important consideration leading the experimenters to pursue a larger detector is the ability of the bubble chamber to easily identify neutron background by a multiple scattering analysis. Because the mean-free-paths are typically of order 5 cm for the most troublesome background neutrons in most candidate fluids, neutron induced events will frequently appear as multiple bubbles. Inexpensive cameras can easily resolve bubbles at the millimeter level so very high effective segmentation is easily attained. For large bubble chambers, neutron induced events will occur preferentially near the vessel walls and significant self-shielding will be possible.

A crucial consideration favoring the bubble chamber is the ease with which one can explore a variety of different target nuclei. The initial target fluid of choice is trifluoroiodomethane (CF_3I) which has a density of 2.1 g/cc. Because of its modest boiling point, it is possible to operate a CF_3I bubble chamber very near atmospheric pressure and room temperature. In addition, CF_3I provides excellent sensitivity to spin-independent couplings because of the large A^2 enhancement for scattering on iodine. It also provides excellent sensitivity to spin-dependent couplings by virtue of the fluorine which has ~100% isotopic abundance of spin ½ ^{19}F and has a favorable nuclear form factor. It will be straight-forward to increase confidence in the WIMP interpretation of putative signal by operating the chamber with CF_3Br, C_4F_{10}, or a variety of other possible target fluids.

The weakness of the bubble chamber technique arises from the lack of event by event energy information. For nuclear recoil events, the bubble chamber behaves like a calorimeter with a discriminator, where the discriminator threshold is determined by the operating temperature and pressure. Operating at the most sensitive dark matter thresholds, events resulting from the α-decays of U and Th daughters which are in solution in the target fluid will be well above threshold (these are typically 100 keV recoils.) The experiment will not be able to discriminate these events on an event by event basis, so the realization of the full physics reach will depend on the ability to purify the target fluid. While it is possible to measure and subtract this class of background by operating at two detector thresholds or by scanning the operating threshold, the best sensitivity will result from a detector that is free of this contamination. Fortunately, significant physics reach can be attained with levels of purification that have already been demonstrated by other groups.

PROJECT DESCRIPTION

Figure 1 illustrates the general features of the design for a continuously sensitive chamber. The superheated liquid is contained in a quartz bell jar, with a layer of water floating on top. The water isolates the superheated liquid from contact with a metal pressure-transmitting diaphragm. The diaphragm flexes to equalize the pressure inside the quartz with the pressure of a surrounding hydraulic fluid which might be propylene glycol, water, or mineral oil. The pressure difference across the quartz wall is maintained near zero and the stress in the quartz is therefore very low. The hydraulic fluid and inner vessel are inside a conventional stainless steel pressure vessel. The active volume of the detector may be viewed by video cameras through small glass view ports.

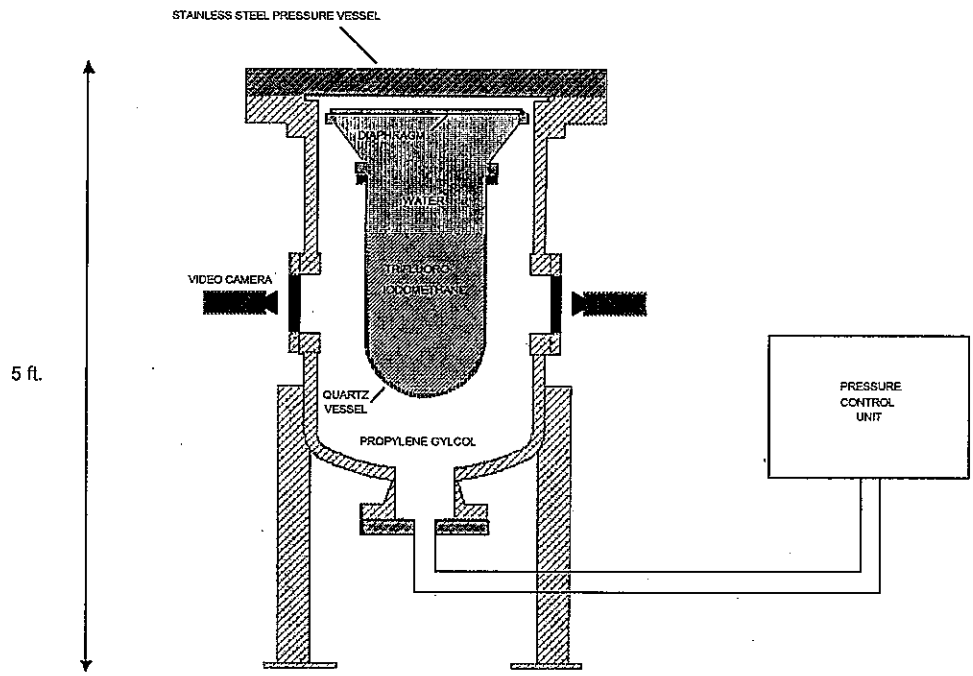

Figure 1: Conceptual design for the 60-kg bubble chamber showing the inner quartz vessel, the pressure balancing diaphragm, the outer pressure vessel, and the external cameras and hydraulic control unit.

Several small chambers have been constructed to test the various design options, including the 1-liter (2-kg) chamber installed in the NUMI tunnel in 2005 (T-945). The essential design feature enabling the near-continuous sensitivity of all of these devices is the use of a water blanket to isolate the pressure control mechanism from the active, superheated liquid. The water isolates the superheated liquid from the bubble nucleation sites that are present on rough metal surfaces and also serves, together with the external hydraulic fluid, as a neutron shield and heat-exchange medium.

The "Pressure Control Unit" shown in the drawing is responsible for cycling the pressure of the inner and outer vessel. The chamber is ultimately controlled by compressed air which is switched on or off via solenoid valves. The compressed air drives a pneumatic cylinder which actuates a hydraulic cylinder which transmits the pressure to the compression fluid. The fluid in the inner vessel is maintained in equilibrium with the hydraulic fluid through the flexible diaphragm. Starting with a compressed chamber, the detector initiates an expansion cycle by releasing the compressed air and allowing the pressure to bleed down to the set point. With the pressure relieved, the active fluid expands to its sensitive superheated state to await a bubble. The experiment senses the appearance of a bubble via a pressure pulse, an acoustic signal, or via analysis of the streaming video images. When a bubble is detected, the solenoid valve is actuated and the chamber is rapidly re-pressurized.

It is worth noting that all of the design options the experimenters have considered seem to work very well. One can use diaphragms or bellows to balance the pressure. One can use camera ports or encapsulated cameras. One can trigger using pressure sensors, fast AC pressure transducers, piezo-electric acoustic sensors, or video image analysis. The experimenters are confident that the availability of such a variety of viable engineering options will allow for the development of robust, cost effective, and virtually maintenance-free bubble chambers. A sample detailed design of a 60 kg chamber is shown in Appendix II.

The long-term goal of the COUPP collaboration is to mount a one ton scale dark matter search experiment based on continuously sensitive bubble chamber technology. This MOU outlines an agreement for the initial stage, which would include the construction of a 60 kg prototype bubble chamber at Fermilab and the commissioning and testing of this bubble chamber in the already established infrastructure in the tunnel upstream of the MINOS Near Detector. A layout of the experiment in this area is shown in Appendix III. The initial phase would also include the engineering and design support necessary to develop a detailed proposal for a deep underground site. If successful in the efforts with the 60 kg device in the MINOS tunnel, the experimenters would seek approval to proceed with the construction of an appropriate deep underground site for the operation of the 60 kg chamber.

The choice of a 60 kg (30 liter) device is influenced by a handful of practical considerations such as the capacity of the existing shielding array and muon veto, the available sizes of standard commercial flanges, and the guidance of the quartz vendor about the maximum comfortable size for vessel fabrication. In short, the experimenters have chosen a size that can be built without special engineering considerations. The plan is to commission this chamber in the MINOS site, and to understand any mechanical engineering issues that may arise with a larger device. And, of course, the collaboration will advance to the next level of understanding of the background rates. Based on background estimates, the experimenters feel that a sensitivity of ~.03 events/kg-day is attainable in the MINOS site.

The specific goals and specific resources that are required from Fermilab include:

1) Completion of a 60-kg mechanical prototype device which would be commissioned and tested in the MINOS site. This will require some dedicated mechanical engineering, design, drafting, and technician support.

2) Upgrade and improvement of the data acquisition and controls systems. This will require dedicated engineering and technician support from the Computing and Particle Physics Divisions.
3) A commissioning/physics data run in the MINOS site with the 60 kg device.
4) Engineering and design of the shielding and infrastructure appropriate for a 60 kg experiment in a deep underground site.
5) Preparation of necessary agreements or memoranda of understanding for the future work in a deep underground site.

Upon successful completion of the work with a 60 kg device in the MINOS site (E961), the experimenters would seek additional approval to proceed with:

1) Site preparation work in a deep underground site.
2) Refurbishing the 60 kg device or the construction of an improved 60 kg device based on experience.
3) Decommissioning of the shielding infrastructure and move to the deep underground site.
4) Commissioning of a physics run of the 60 kg experiment in the deep underground site.

This MOU does not cover this post-E961 effort.

I. PERSONNEL AND INSTITUTIONS:

Scientific spokesperson: Juan Collar, University of Chicago

Fermilab liaisons: Andrew Sonnenschein

The group members at present are:

1.1 University of Chicago: Juan Collar, Keith Crum, Smriti Mishra, Dante Nakazawa, Brian Odom, Julia Rasmussen, Nathan Riley, Matthew Szydagis

1.2 Fermilab: Stephen Brice, Peter Cooper, Mike Crisler, Lauren Hsu, Martin Hu, Erik Ramberg, Andrew Sonnenschein, Robert Tschirhart

1.3 Indiana University, South Bend: Ed Behnke, Ilan Levine, Tina Marie Shepherd

II. EXPERIMENTAL AREA AND SCHEDULE CONSIDERATIONS

2.1 LOCATIONS

2.1.1 An area of approximately 600 square feet will be required in the MINOS underground tunnel for installation of the experiment. This location has been determined to be as upstream as possible in the wide area where the Near Detector Hall turns into the tunnel. Electrical power, compressed air and computer networking utilities will be provided at this location.

2.1.2 The MINOS experiment shares PPD underground space with various tests and other experiments. Access to the underground areas is controlled via training, access keys, limited occupancy and badging in and out when entering or exiting the areas, respectively. Designation of rules and procedures for access to the underground areas and coordination of permits for work to be performed in the underground areas of the PPD are the responsibility of the PPD MINOS Areas Coordinator.

2.1.3 In addition to the MINOS area, clean room B, and the cosmic ray room of Lab 3 will be available for studies and tests related to this experiment. Nitrogen boiled off from a dewar will be supplied to the clean room. A Class 10 clean room will be built inside clean room B for assembly of the chamber.

2.1.4 Space in PAB will be made available for construction of the chamber.

2.2 SETUP

2.2.1 The expected layout of the experiment in the MINOS area is shown in Appendix III.

2.2.2 A copy of the NUMI extraction signal will be made available to the experimenters.

2.2.3 A gantry providing rigging ability up to 1.5 tons will be available.

2.2.4 A tank containing either water or liquid scintillator, for shielding and muon vetoing, will be built that can contain the apparatus and allow for rigging of the detector into and out of this tank. This tank will be a cylinder approximately 2.5 meters in diameter and 3 meters tall.

2.3 SCHEDULE

2.3.1 Design and construction of the detector and support material will take place until Fall, 2008.

2.3.2 Installation and testing of the vessel will take place in the MINOS area starting in late Fall or Winter of 2008.

2.3.3 Data taking will take place into 2009.

III. RESPONSIBILITIES BY INSTITUTION - NON FERMILAB

3.1 University of Chicago will:

3.1.1 Participate in the commissioning and operation of the 60 kg chamber.

3.1.2 Participate in data acquisition and data analysis development.

3.1.3 Be responsible for creating a simulation of the detector for background and calibration studies.

3.1.4 Design and produce a switchable Americium-Beryllium source for use as a calibration tool. [$5K]

3.2 Indiana University, South Bend will:

3.2.1 Participate in the commissioning and operation of the 60 kg chamber.

3.2.2. Design and produce acoustic sensors for installation in the detector and develop analysis methods using these sensors. These sensors will signal the true start time of the event to the order of 100 microseconds. [$10K]

3.2.3 Design and produce cryogenic radon condensing system. [$7K]

3.2.4 Produce radon counting system. [$30K]

3.2.5 Design and produce small radon emanation/diffusion chambers.

3.2.5 Coat Lucas cells with thin layer of Silver-activated Zinc Sulfide, finish assembly and calibrate cell radon efficiency.

3.2.6 Develop and produce submersible temperature sensors.

IV. RESPONSIBILITIES BY INSTITUTION - FERMILAB

4.1 **Fermilab Accelerator Division will provide:**

4.1.1 Assistance in development of illumination and video acquisition.

4.1.2 Technical help in the A0 group for ultrasound cleaning of quartz and steel samples.

4.1.3 Two class 10 clean room assemblies and ultrasound cleanings of the 60 kg vessel.

4.1.4 Technical advice and assistance in creating fixturing for the above cleaning step.

4.1.S Summary of Accelerator Division costs:

Type of Funds	Equipment	Operating	Personnel (person-weeks)
Total new items	$0.0K	$10K	10.0

4.2 Fermilab Particle Physics Division

4.2.1 The PPD Mechanical Department will be responsible for the design, construction and testing of the 60 kg bubble chamber and its attendant pressure control system.

4.2.2 Will buy and machine UV transmitting acrylic and parts for low background Lucas cells.

4.2.3 Will provide an appropriate class clean room in Lab 3 for assembly of the detector

4.2.4 Will provide sufficient quantity of radiopure water on a best-effort basis for the experiment.

4.2.5 The PPD Mechanical Department will be responsible for analysis of the mechanical support issues for the chamber and its associated shielding.

4.2.6 PPD/MD will be responsible for moving the equipment into the MINOS hall and for rigging and handling of the equipment into its final location.

4.2.7 Will maintain the equipment while it is in place.

4.2.8 The PPD ES&H group will assist in all of the necessary safety reviews.

4.2.9 The COUPP experiment shares PPD underground space with various tests and other experiments. Access to the underground areas is controlled via training, access keys, limited occupancy and badging in and out when entering or exiting the areas, respectively. Designation of rules and procedures for access to the underground areas and coordination of permits for work to be performed in the underground areas of the PPD are the responsibility of the PPD MINOS Areas Coordinator.

4.2.S Summary of Particle Physics Division costs:

Type of Funds	Equipment ($K)	Operating	Personnel (person-weeks)
Data Acquisition, Cameras, Controls	50		20
Bubble Chamber	200		150
Pressure Control	32		20
Shielding Tank and Muon Veto	25		20
Water System	34		20
Clean Rooms	44		20
Rigging, Support, Installation	15		20
Total new items	$400K	$0K	270

4.3 Fermilab Computing Division

4.3.1 CD will assist in the creation of a Linux based Labview data acquisition system for the experiment.

4.3.2 Maintenance support and updating of computers will be provided.

4.3.3 An Ethernet connection to the Data Acquisition computer will be necessary.

Type of Funds	Equipment	Operating	Personnel (person-weeks)
Labview DAQ	$5K		4
Total new items	$5K	$0K	4

4.4 Fermilab ES&H Section

4.4.1 The ESH Section will assist with safety reviews of the equipment, including a review of the ODH analysis and safety of the CF_3I. Appendix IV contains a preliminary discussion of some of the issues surrounding the use of large quantities of CF_3I.

4.4.2 Various radioactive sources will be required for short periods of testing. ESH will coordinate the installation and maintenance of these sources in the MINOS underground hall.

V. SUMMARY OF COSTS

Source of Funds [$K]	**Equipment**	**Operating**	**Personnel** (person-weeks)
Particle Physics Division	$400K	$0K	270
Accelerator Division	0	10	10
Computing Division	$5K	0	4
Totals Fermilab	$405K	$10K	284
Totals Non-Fermilab	$15K		

VI. SPECIAL CONSIDERATIONS

6.1 The responsibilities of the spokesman of the COUPP collaboration and the procedures to be followed by experimenters are found in the Fermilab publication "Procedures for Experimenters": (http://www.fnal.gov/directorate/documents/index.html). The Physicist in charge agrees to those responsibilities and to follow the described procedures.

6.2 To carry out the experiment a number of Environmental, Safety and Health (ES&H) reviews are necessary. This includes creating an Operational Readiness Clearance document in conjunction with the standing Particle Physics Division committee. The PI of the Syracuse group will follow those procedures in a timely manner, as well as any other requirements put forth by the division's safety officer.

6.3 All regulations concerning radioactive sources will be followed. No radioactive sources will be carried onto the site or moved without the approval of the Fermilab ES&H section.

6.4 All items in the Fermilab Policy on Computing will be followed by the experimenters. (http://computing.fnal.gov/cd/policy/cpolicy.pdf).

6.5 The spokesman of the COUPP collaboration will undertake to ensure that no PREP or computing equipment be transferred from the experiment to another use except with the approval of and through the mechanism provided by the Computing Division management. They also undertake to ensure that no modifications of PREP equipment take place without the knowledge and consent of the Computing Division management.

6.6 The COUPP collaboration will be responsible for maintaining and repairing both the electronics and the computing hardware supplied by them for the experiment. Any items for which the experiment requests that Fermilab performs maintenance and repair should appear explicitly in this agreement.

6.7 At the completion of the experiment:

6.7.1 The spokesman of the COUPP collaboration is responsible for the return of all PREP equipment, computing equipment and non-PREP data acquisition electronics. If the return is not completed after a period of one year after the end of running the spokesman of the COUPP collaboration will be required to furnish, in writing, an explanation for any non-return.

6.7.2 The experimenters agree to remove their experimental equipment as the Laboratory requests them to. They agree to remove it expeditiously and in compliance with all ES&H requirements, including those related to transportation. All the expenses and personnel for the removal will be borne by the experimenters.

6.7.3 The experimenters will assist the Fermilab Divisions and Sections with the disposition of any articles left in the offices they occupied.

6.8 An experimenter will be periodically available to report on the effort at the Fermilab All Experimenters' Meeting.

SIGNATURES:

_____ / / 2008
Juan Collar, University of Chicago

_____ / / 2008
Greg Bock, Particle Physics Division

_____ 11 / 10 / 2008
Roger Dixon, Accelerator Division

_____ 8 / 21 / 2008
Victoria White, Computing Division

_____ 11 / 5 / 2008
William Griffing, ES&H Section

_____ / /2008
Stephen Holmes, Associate Director, Fermilab

_____ / /2008
Young Kee Kim, Deputy Director, Fermilab

APPENDIX I - Hazard Identification Checklist

Items for which there is anticipated need have been checked

Cryogenics		Electrical Equipment		Hazardous/Toxic Materials	
	Beam line magnets		Cryo/Electrical devices		List hazardous/toxic materials
	Analysis magnets		capacitor banks		planned for use in a beam line or experimental enclosure:
	Target	X	high voltage	X	30 liter CF_3I
	Liquid Argon TPC		exposed equipment over 50 V		
Pressure Vessels		**Flammable Gases or Liquids**			
0.5m	inside diameter	Type:			
200 psi nom 600 psi rated	operating pressure	Flow rate:			
Glass	window material	Capacity:			
standard pressure rated glass windows	window thickness	**Radioactive Sources**			
Vacuum Vessels		X	permanent installation	**Target Materials**	
	inside diameter		temporary use		Beryllium (Be)
	operating pressure	Type:	**Switchable AmBe**		Lithium (Li)
	window material	Strength:	**10 microCurie**		Mercury (Hg)
	window thickness	**Hazardous Chemicals**			Lead (Pb)
Lasers			Cyanide plating materials		Tungsten (W)
	Permanent installation		Scintillation Oil		Uranium (U)
	Temporary installation		PCBs		Other :
	Calibration		Methane	**Mechanical Structures**	
	Alignment		TMAE	X	Lifting devices
type:			TEA		Motion controllers
Wattage:			photographic developers	X	scaffolding/elevated platforms
class:			Other:		Others

APPENDIX II. DESIGN OF 60 KG BUBBLE CHAMBER

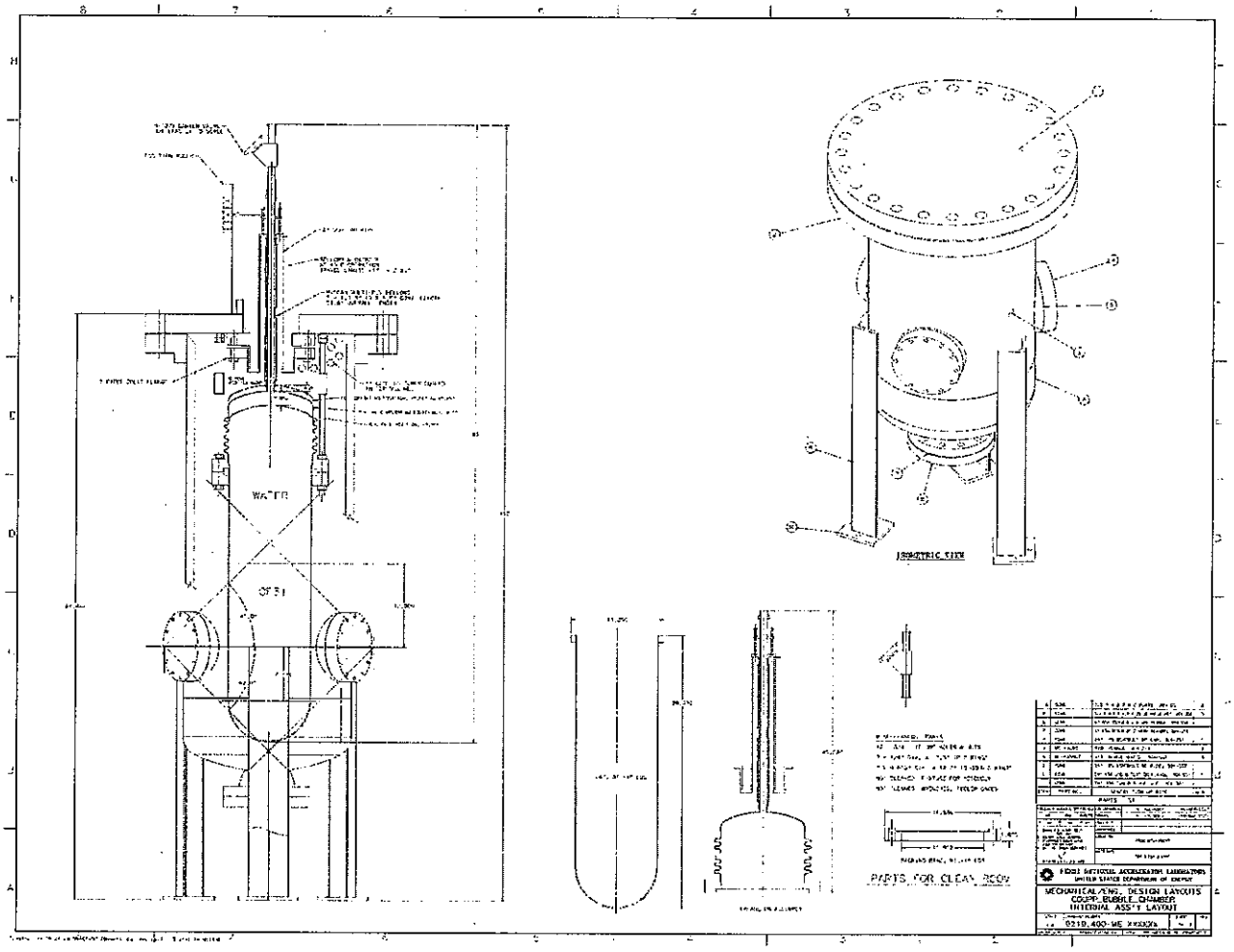

APPENDIX III. LAYOUT OF THE COUPP DETECTOR IN THE MINOS TUNNEL

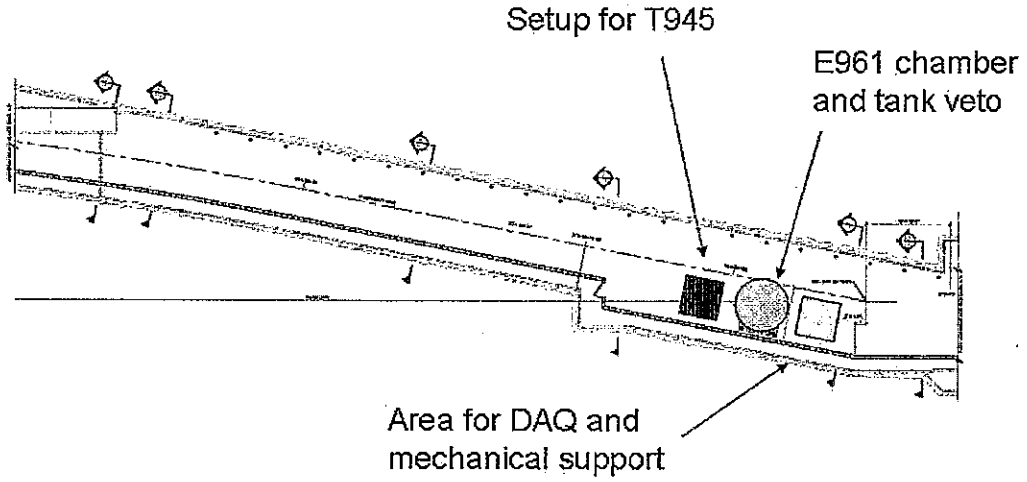

APPENDIX IV. SAFETY ISSUES SURROUNDING THE USE OF CF3I

E961 will use a significant quantity of the halon substitute CF_3I in the detector. There are some safety hazards associated with this substance, as summarized by a 2004 report on 'Iodotrifluoromethane", by the National Research Council. A safe exposure limit for concentrations of CF3I is reported there to be on the order of 0.3%. Above that level, toxicity has been shown. The compound can break down by UV photolysis or elevated temperatures (>100 degrees C) into HF or HI.

The experiment has several ways of addressing these safety hazards:

1) Primarily, the CF3I is fully contained within two nested vessels – one of quartz, which is embedded in a thick steel chamber. Breaking both these containment vessels is quite unlikely. The interior quartz vessel is shielded from UV light when installed.
2) Even if some accident scenario occurs, then it is unlikely that significant dissociation products will be present, since the temperature of the CF3I will be kept below 50 degrees C, and the lighting in the MINOS Near Detector Hall is not strong.
3) No soldering or brazing of any CF3I tubes will be allowed.
4) A procedure will be in place to recover the CF3I at any time.
5) The experiment plans on creating an evacuation plan for use under accident scenarios.
6) All ODH and other hazard reviews will be performed by the experiment and relevant Fermilab safety organizations (PPD, ESH) before unattended operations.
7) The experiment will keep a library of documents that outlines the safety hazards associated with CF3I and provide copies for PPD.