$AB, 2010-03-02
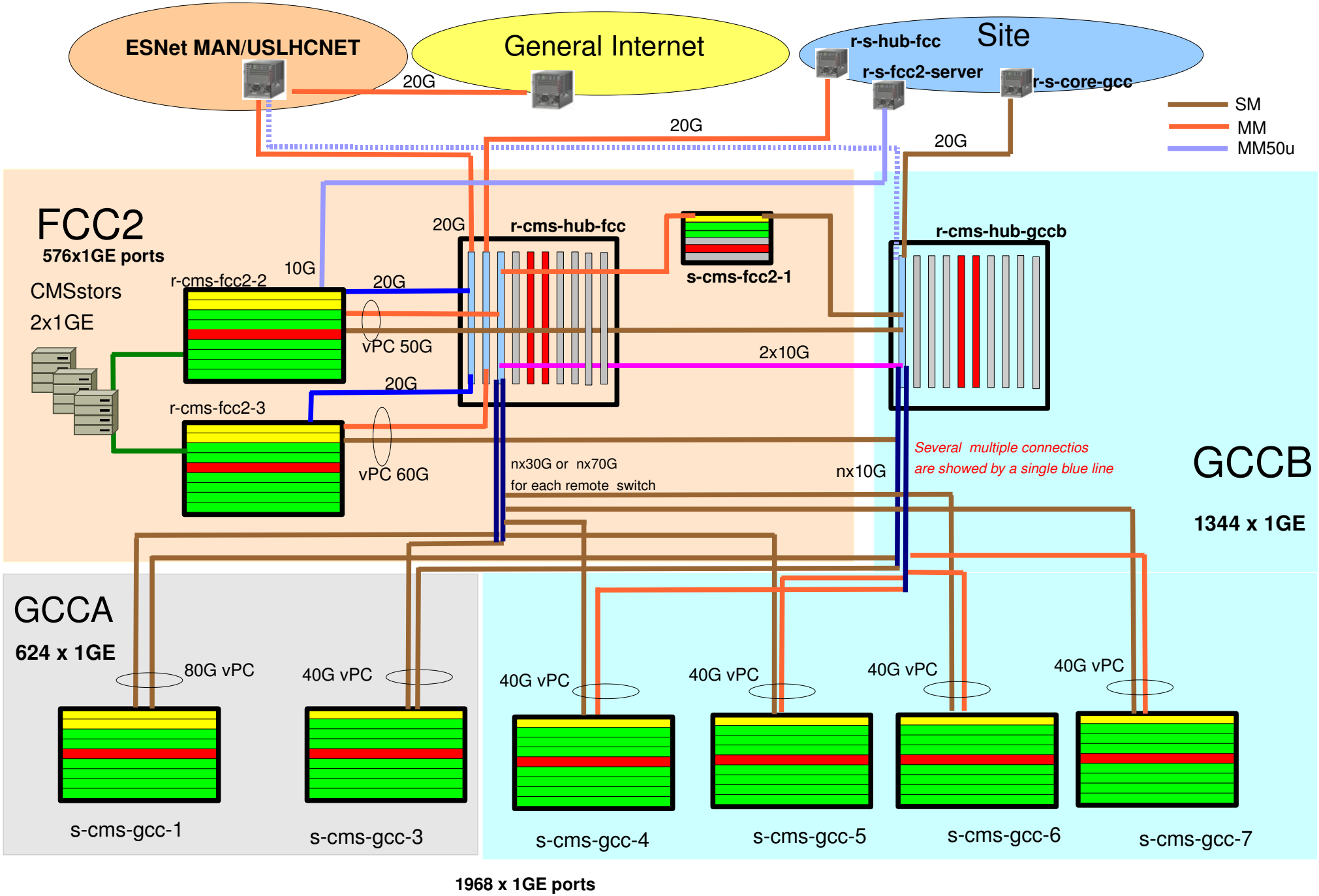
USCMS Tier1 Network (2xN7K-ASYM)