Accelerator Support and Development

Luciano Piccoli

May 16, 2006

Project Drivers & Scope

- Tevatron Beam Position Monitor (TBPM)
  - Support and maintenance (commissioned in 2005)
  - AD TBPM section, CEPA hardware and Software

- Main Injector Beam Position Monitor (MIBPM)
  - Hardware
    - Timing generator fanout (TGF-II) module and its I/O card, Transition controller.
    - Firmware for the Transition module.
  - Software
    - Extension of front-end software developed for the TBPM project
      - support multiple MI states
      - follow sequence of commands for each state
      - turn-by-turn data transferred from digitizers at end of MI cycle
      - quick transition between modes of operation.
  - AD MIBPM section, CEPA hardware and Software

Project Drivers & Scope

- Tevatron Ion Profile Monitor (TIPM)
  - Software
    - Dave Slimmer (AD)
  - ESE asked to design and build Ionization Profile Monitor DAQ buffer.
  - Hardware – Buffer board
    - ESE designed and built the five boards necessary, and developed the firmware for the FPGA.
    - We have assisted in commissioning the IPM system, and have provided IPM Buffer bug fixes as necessary.
    - Rick Kwarciany, Jim Franzen, Mark Bowden, Andreas Jansson(AD).

Project Deliverables Status

- TBPM
  - Maintenance mode
    - Couple of minor operational problems
  - Request for new feature (Vahid Ranjbar)
    - Apply corrections to the beam based on real time positions from BPMs at B0 and D0
    - Need to understand the long term support for this feature
- MIBPM
  - Front-end software
    - Major functionalities are implemented (before shutdown)
    - Minor additions for controlling transition modules
    - Automated test before commissioning
  - Hardware
    - Timing Generator Fanout (TGF-II): 11-Tested, 7-required
    - TGF I/O Card: 7-Tested
    - BPM Transition Crate Controller: 1-Tested, remaining being assembled
    - Integration Test Stand
      - MI-60 system being tested w/ one 8-channel Transition card.
      - Waiting for additional production 8-channel Transition Cards for full system test.
- TIPM
  - Development and deployment phase essentially finished.

Project Milestones

- TBPM
  - Continuation of maintenance
  - Orbit correction: expected first tests after shutdown
- MIBPM
  - MI-40 house and single BPM at MI-30 installed before shutdown
  - Hardware complete by June.
  - Integration tests (late May – early June)
  - Installation and commissioning (this summer)
- TIPM
  - Buffers ready to be installed
  - Will be installed as necessary to support number of installed front-end boards.

Effort Profile BPM Support and Development

- Software: 2 employees in CEPA/OAA for MIBPM and TBPM (maintenance)

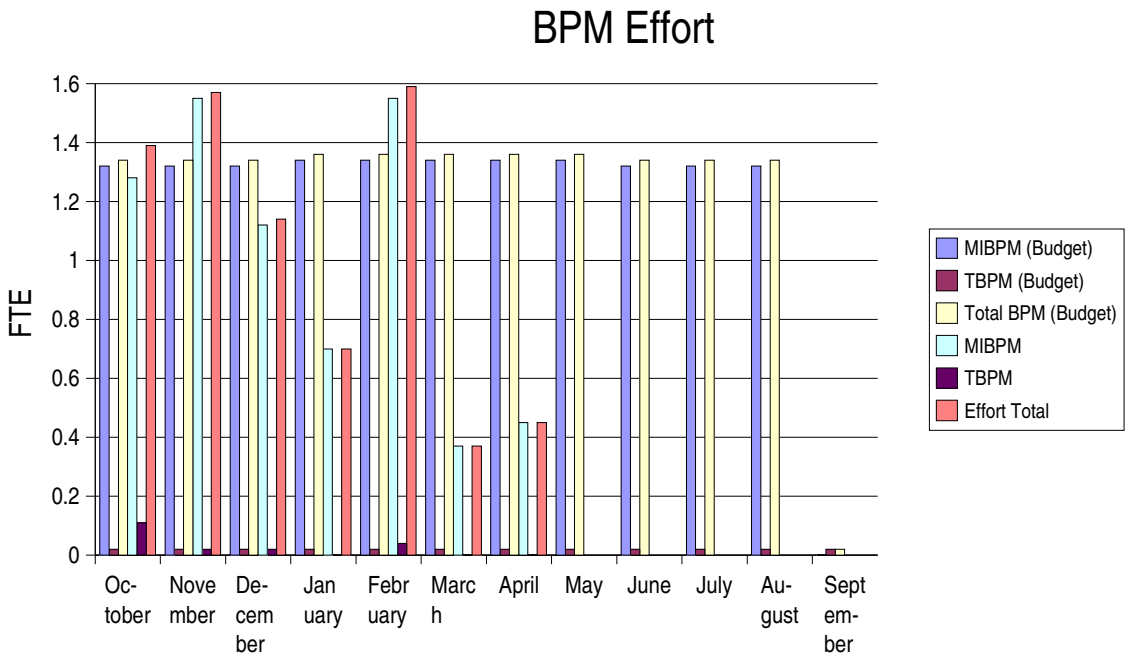

- MIBPM Hardware: Currently about 2 FTE/month. Should transition to support during summer.

Effort Profile TIPM Support and Development

- Software: No employees in CEPA/OAA, 1 employee transferred to AD.

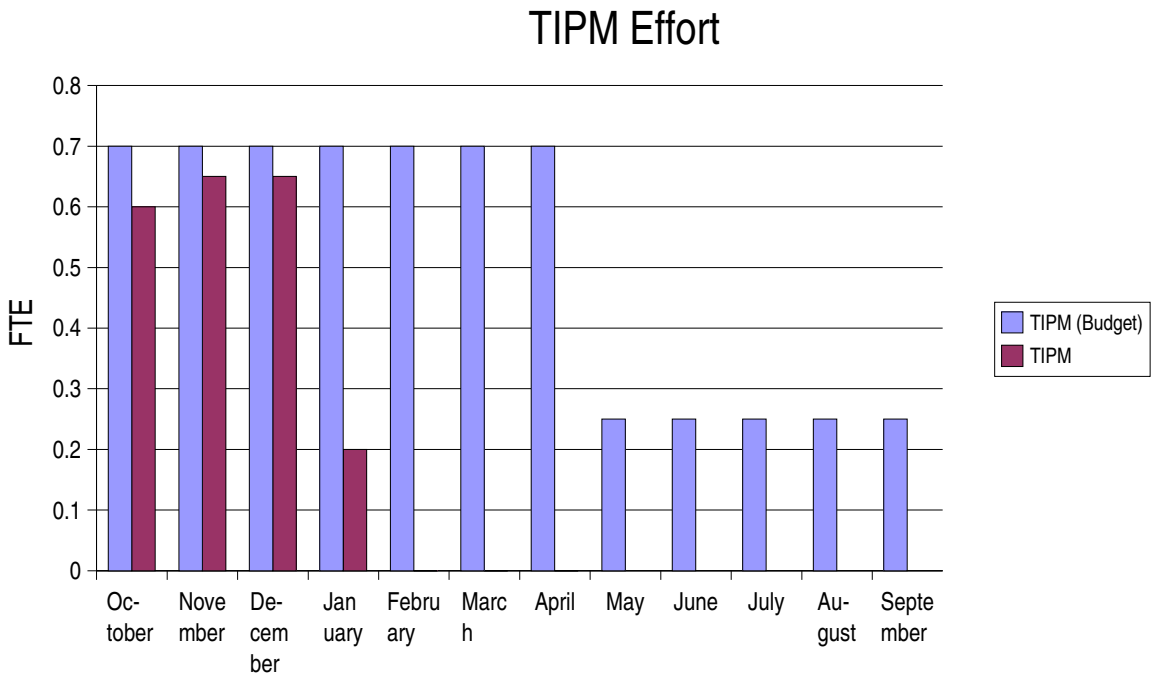

- Hardware: Approximately 10% of an FTE now, tapering to less than 5% by the end of the year.

Risks

- TBPM
  - MVME2400: end of lined this year (27 houses, 10% spares)
    - Software can quickly be ported to MVME5500 (MIBPM)
  - Introduction of bugs with the new feature

- MIBPM
  - Handling all possible MI states not tested

Additional Slides

Main Injector Beam Position Monitor (MIBPM)

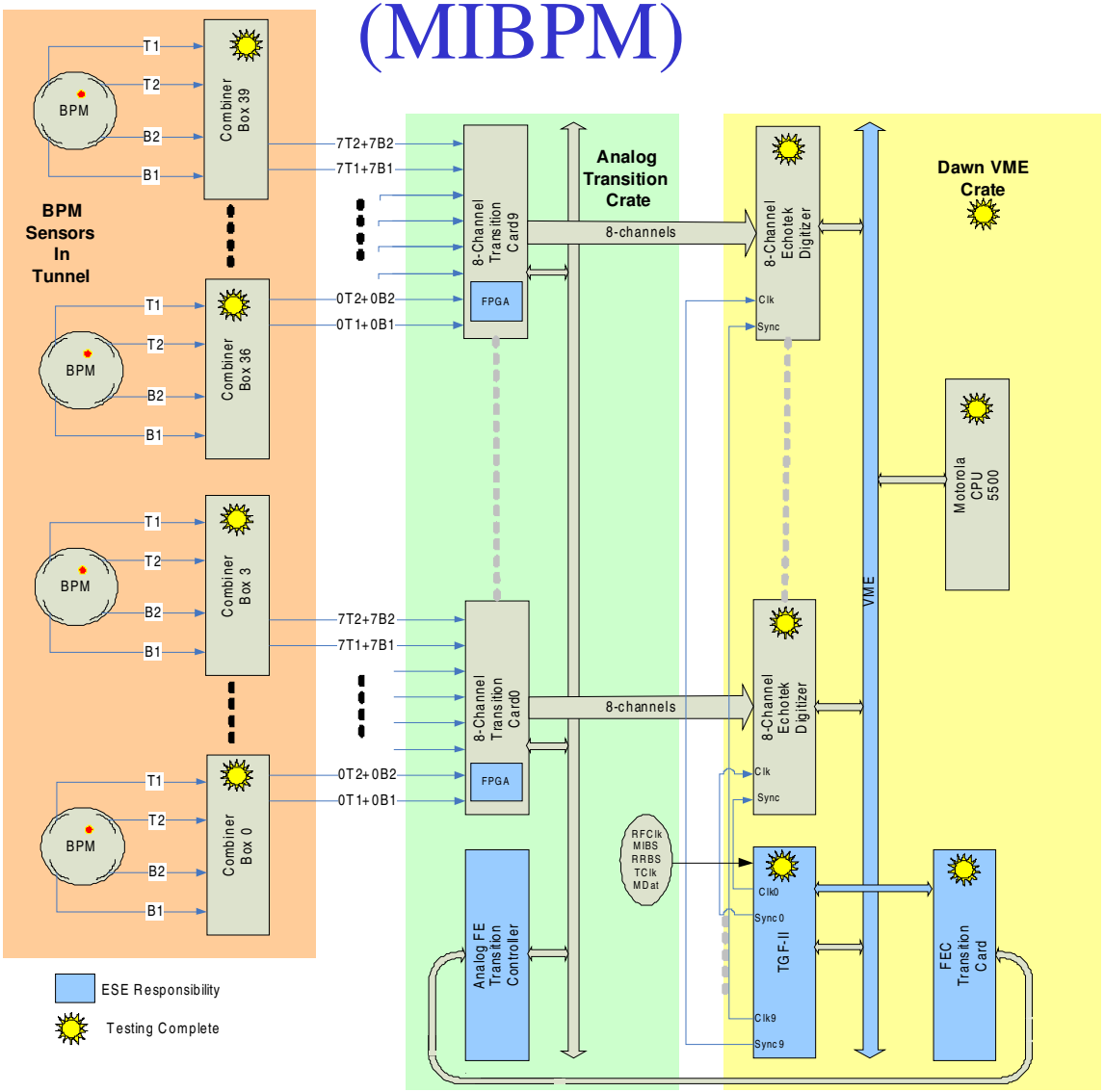
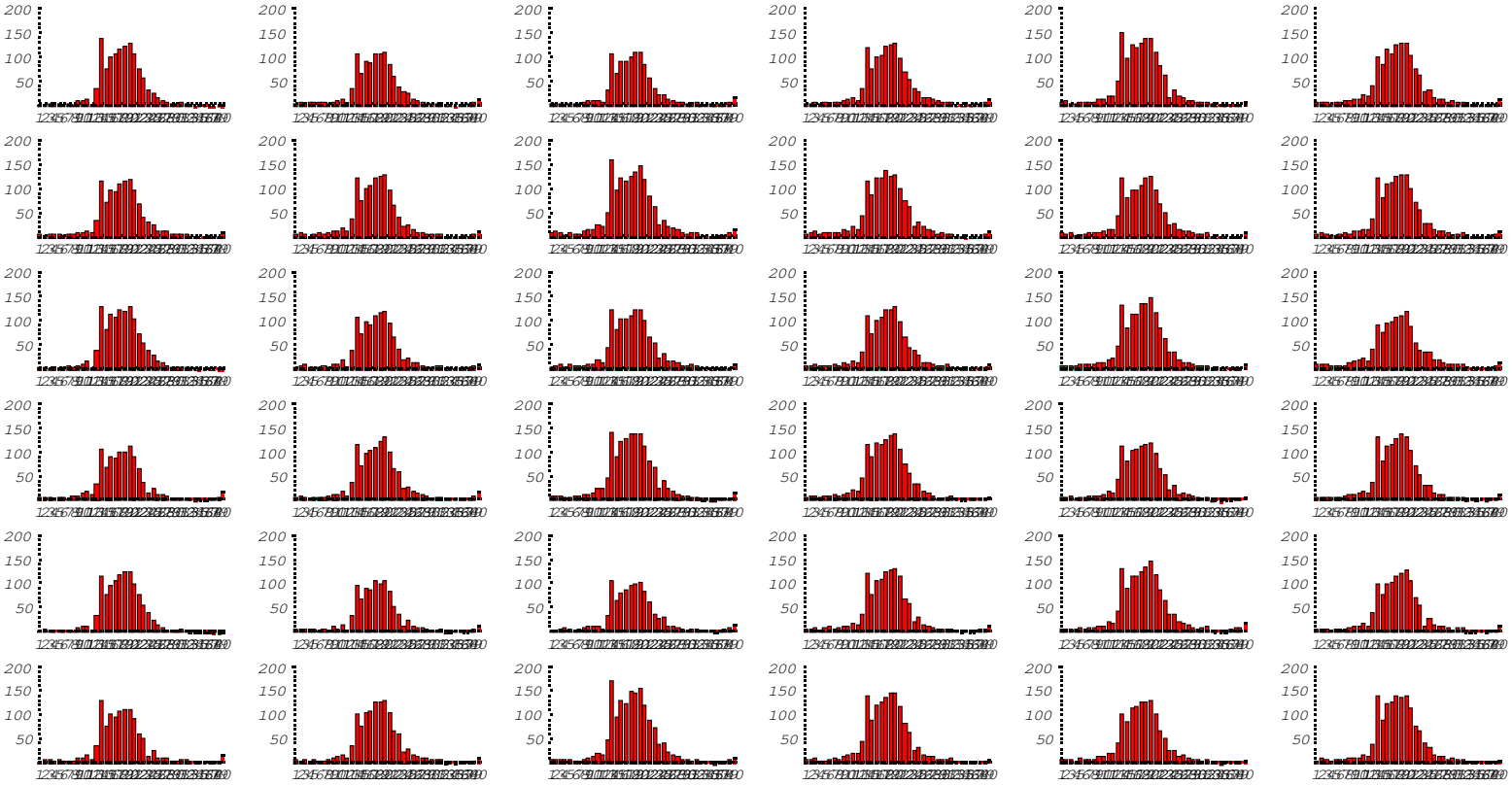
First IPM System Results