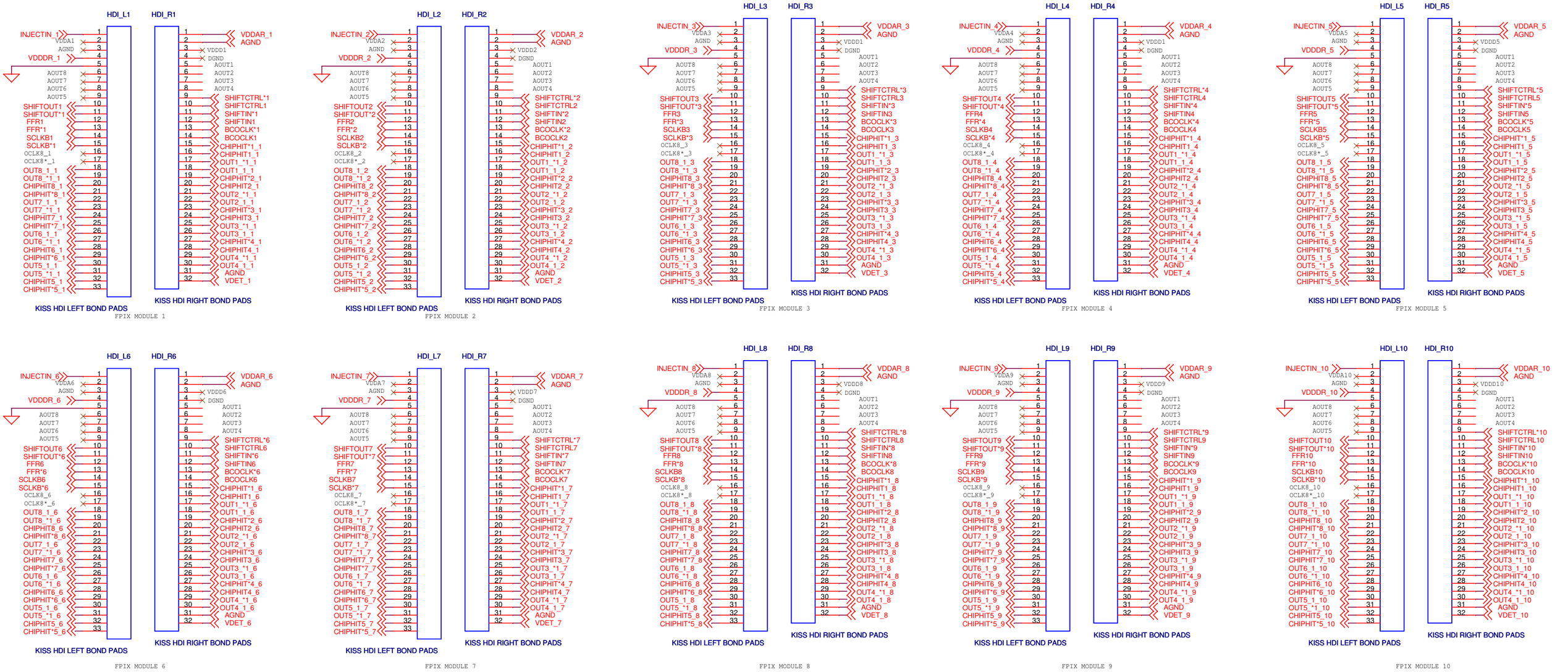

NOTE: SIGNALS WITH TEXT ONLY ARE ON HDI
BUT NOT ON PIXEL PLANE PCB

Title	Pixel Plane PCB HDI 1-3
Size: Custom	Document Number: Jeff Andresen/Guilherme Cardoso/Marcos Turqueti
Rev	<RevCo
Date: Monday, April 02, 2007	Sheet 1 of 5

PTA CONNECTORS

LEFT SIDE OF HDI MODULE PTA CONNECTORS

NOTE: PINS 1 & 2 ON PTA CONNECTORS CAN ONLY BE OUTPUTS FROM FPIX2 TO INPUTS ON PTA

NOTE: OUT1_6_1 = U1, OUT 6, OF MODULE 1

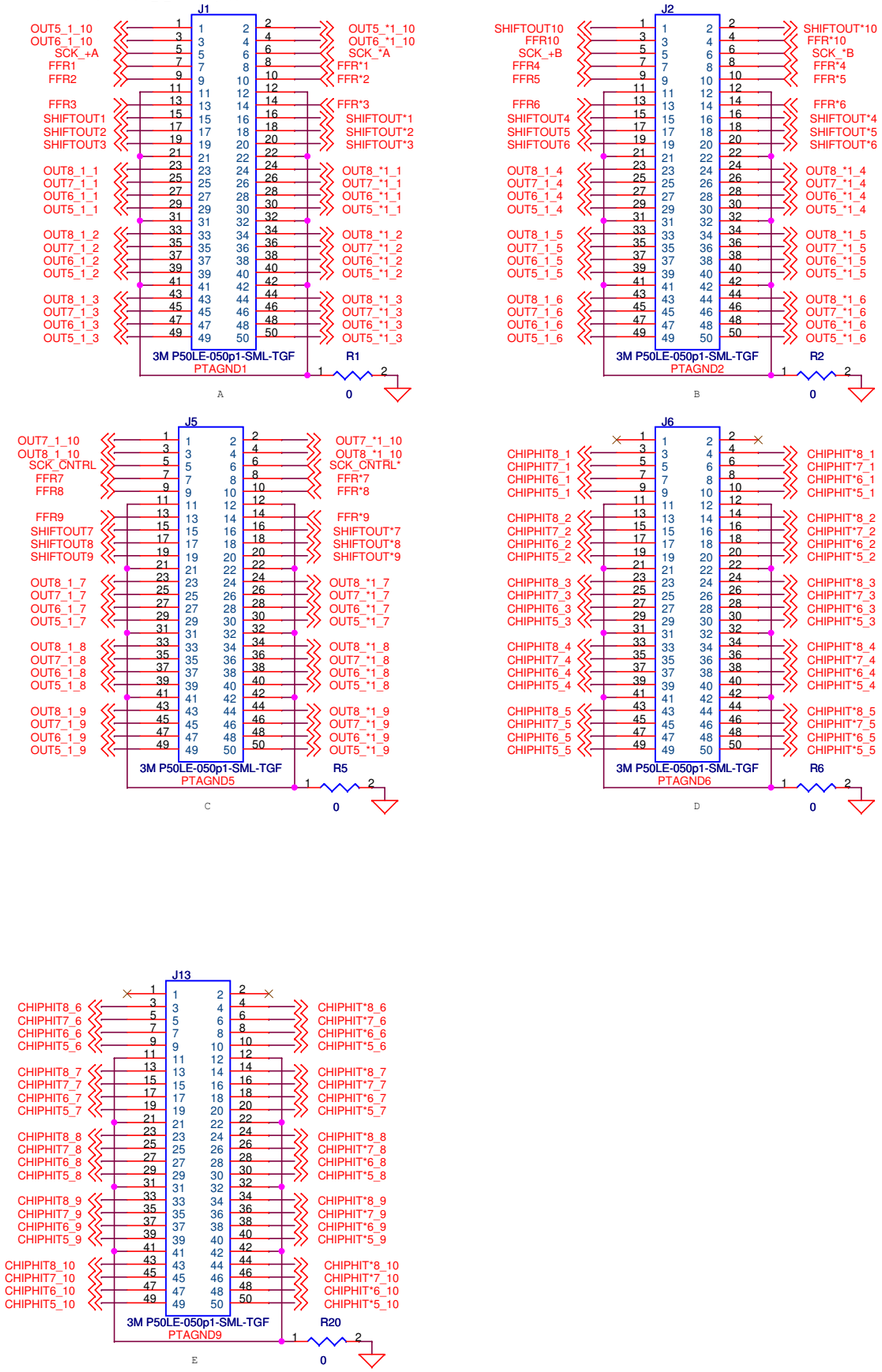

LEFT SIDE OF HDI MODULE PTA CONNECTORS

RIGHT SIDE OF HDI MODULE PTA CONNECTORS

RIGHT SIDE OF HDI MODULE PTA CONNECTORS

NOTE: PINS 1 & 2 ON PTA CONNECTORS CAN ONLY BE OUTPUTS FROM FPIX2 TO INPUTS ON PTA

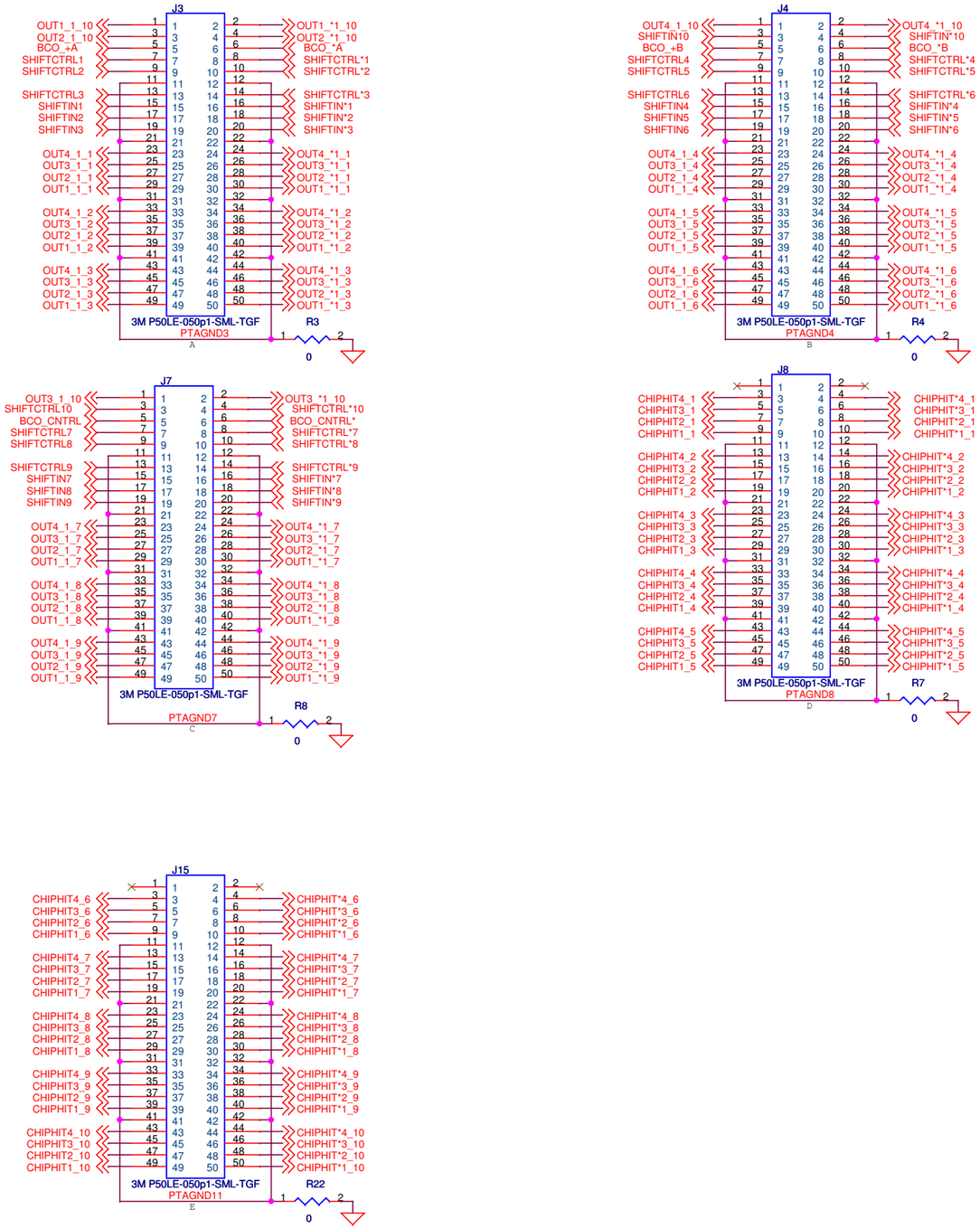

Title	Pixel Plane PTA Connectors		
Size: Custom	Document Number		Rev: <RevCo
	Jeff Andresen/Guilherme Cardoso/Marcos Turqueti		
Date: Monday, April 02, 2007	Sheet 2 of 5		

RIGHT ANGLE THROUGH HOLE CONNECTORS

NOTE: OUT1_6_1 = U1, OUT 6, OF MODULE 1
CHIPHIT = OUT 2 OF EACH CHIP

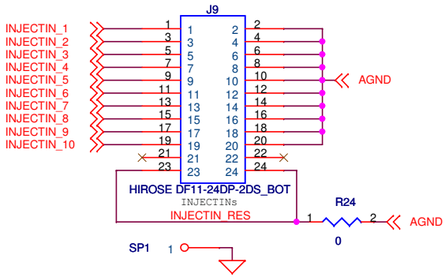

SMT PAD FOR CABLE SHIELD

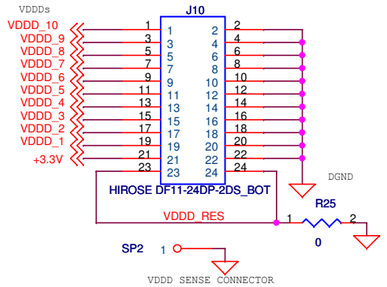

VDDD SENSE CONNECTOR

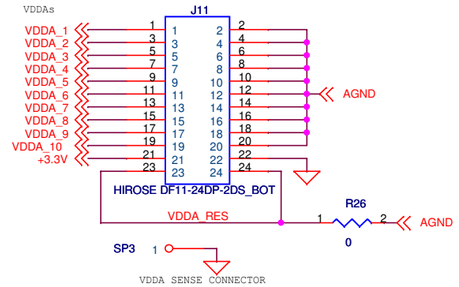

VDDA SENSE CONNECTOR

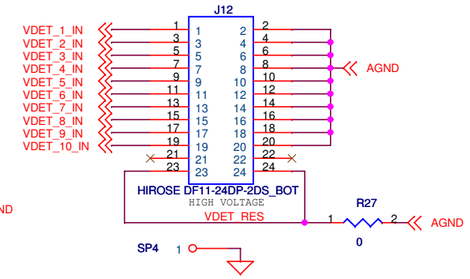

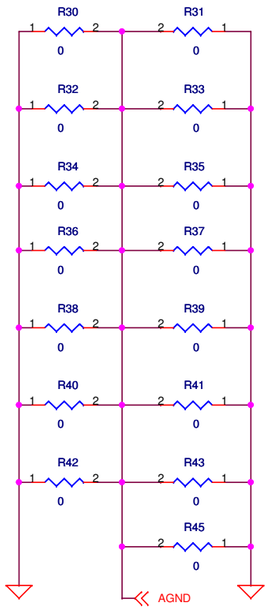

GND TO AGND JUMPERS

ALL RESISTORS AND CAPS ARE 0603 EXECPT HIGH VOLTAGE WHICH ARE 1206

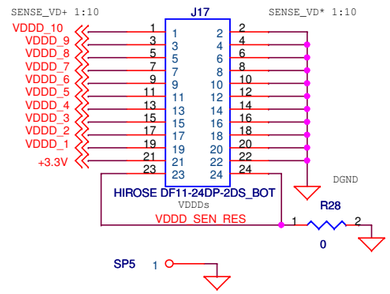

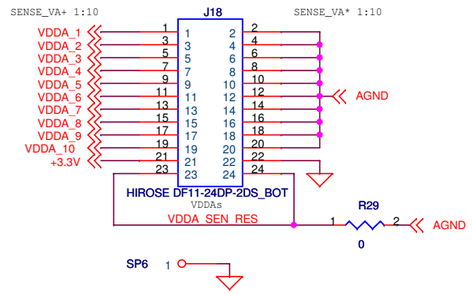

U8:U5 OUTS
SHIFTOUT
FFR
SERIALCLKB

U8 U7 U6 U5 U4 U3 U2 U1

U4:U1 OUTS
SHIFTIN
SHIFTCTRL
BCOCLK

HDI MODULE 1

HDI MODULE 2

HDI MODULE 3

HDI MODULE 4

HDI MODULE 5

HDI MODULE 6

HDI MODULE 7

HDI MODULE 8

HDI MODULE 9

HDI MODULE 10

PIXEL PLANE PCB HDI MODULES

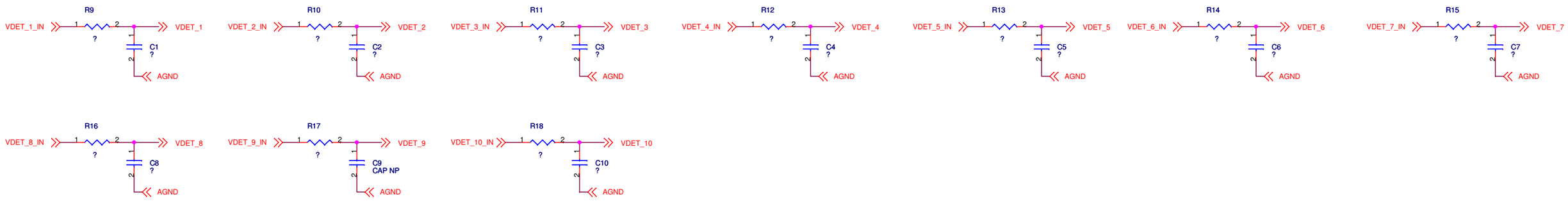

SMT TARGET PADS

Title	CHIP HIT CONNECTORS	
Size: Custom	Document Number	Rev: <RevCo
	Jeff Andresen/Guilherme Cardoso/Marcos Turqueti	
Date: Monday, April 02, 2007	Sheet 3 of 5	

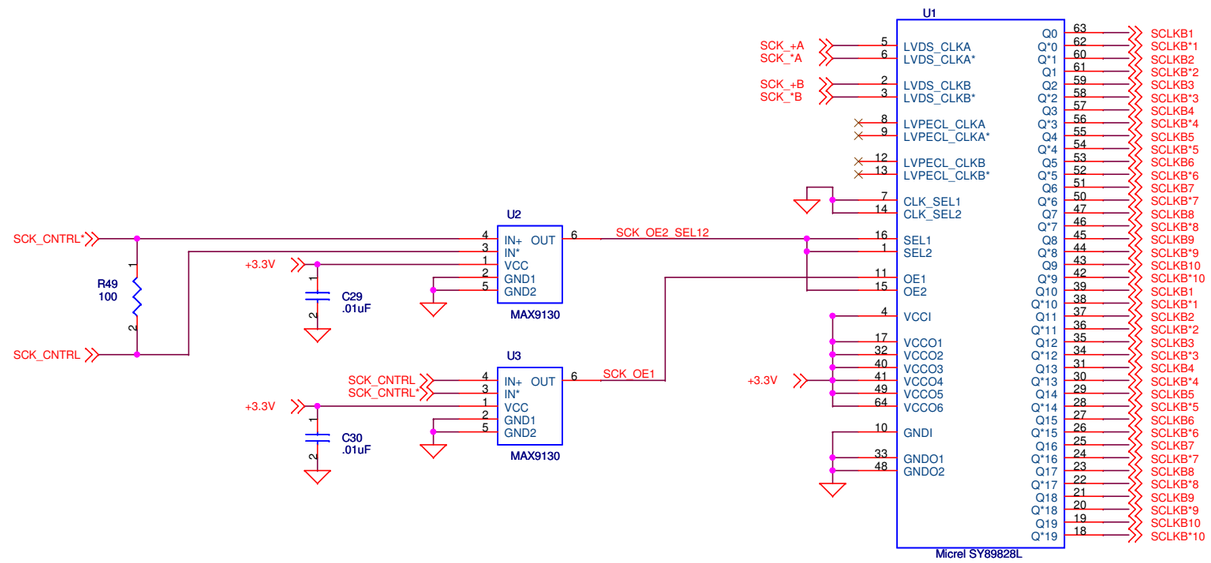

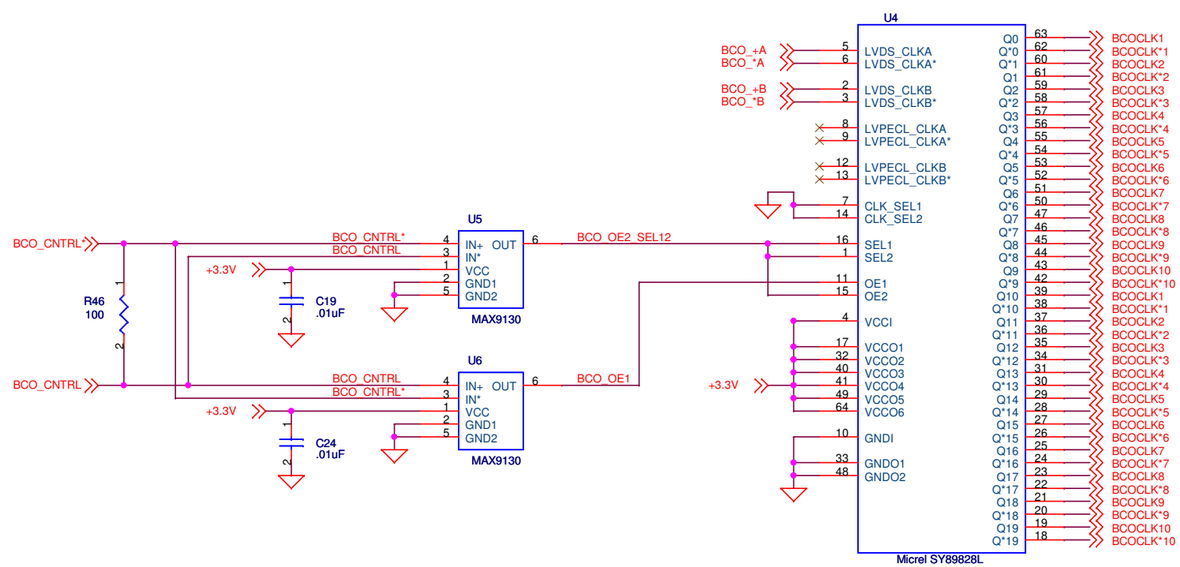

		SEL1	OE1	SEL2	OE2
CLK_A INPUT	OUTPUT_Q0-Q9	0	1		0
CLK_A INPUT	OUTPUT_Q10-Q19		0	0	1
CLK_B INPUT	OUTPUT_Q0-Q9	1	1		0
CLK_B INPUT	OUTPUT_Q10-Q19		0	1	1

Q0:Q9=QUTPUT A

Q10:Q19=QUTPUT B

CLK_SEL=0 SELECTS LVDS INPUTS
CLK_SEL=1 SELECTS LVPECL INPUTS
SEL1=0 SELECTS INPUT CLK_A FOR OUTPUTS Q0-Q9
SEL1=1 SELECTS INPUT CLK_B FOR OUTPUTS Q0-Q9
SEL2=0 SELECTS INPUT CLK_A FOR OUTPUTS Q10-Q19
SEL2=1 SELECTS INPUT CLK_B FOR OUTPUTS Q10-Q19
OE1=1 FOR OUTPUTS Q0-Q9
OE2=1 FOR OUTPUTS Q10-Q19

SCLKB TERMINATED WITH 100 OHMS ON HDI

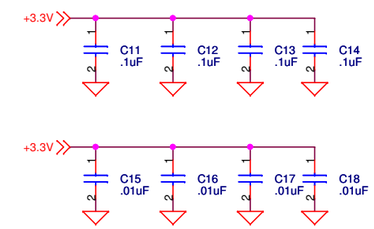

Q0:Q9=QUTPUT A

Q10:Q19=QUTPUT B

BCOCLK TERMINATED WITH 100 OHMS ON HDI

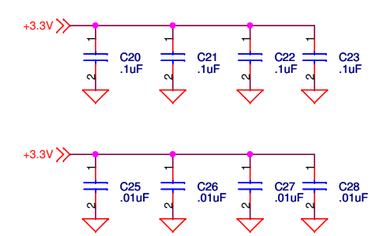

Title	CLOCK FANOUTS	
Size Custom	Document Number Jeff Andresen/Guilherme Cardoso/Marcos Turqueti	Rev <RevCo
Date: Monday, April 02, 2007	Sheet 4 of 5	

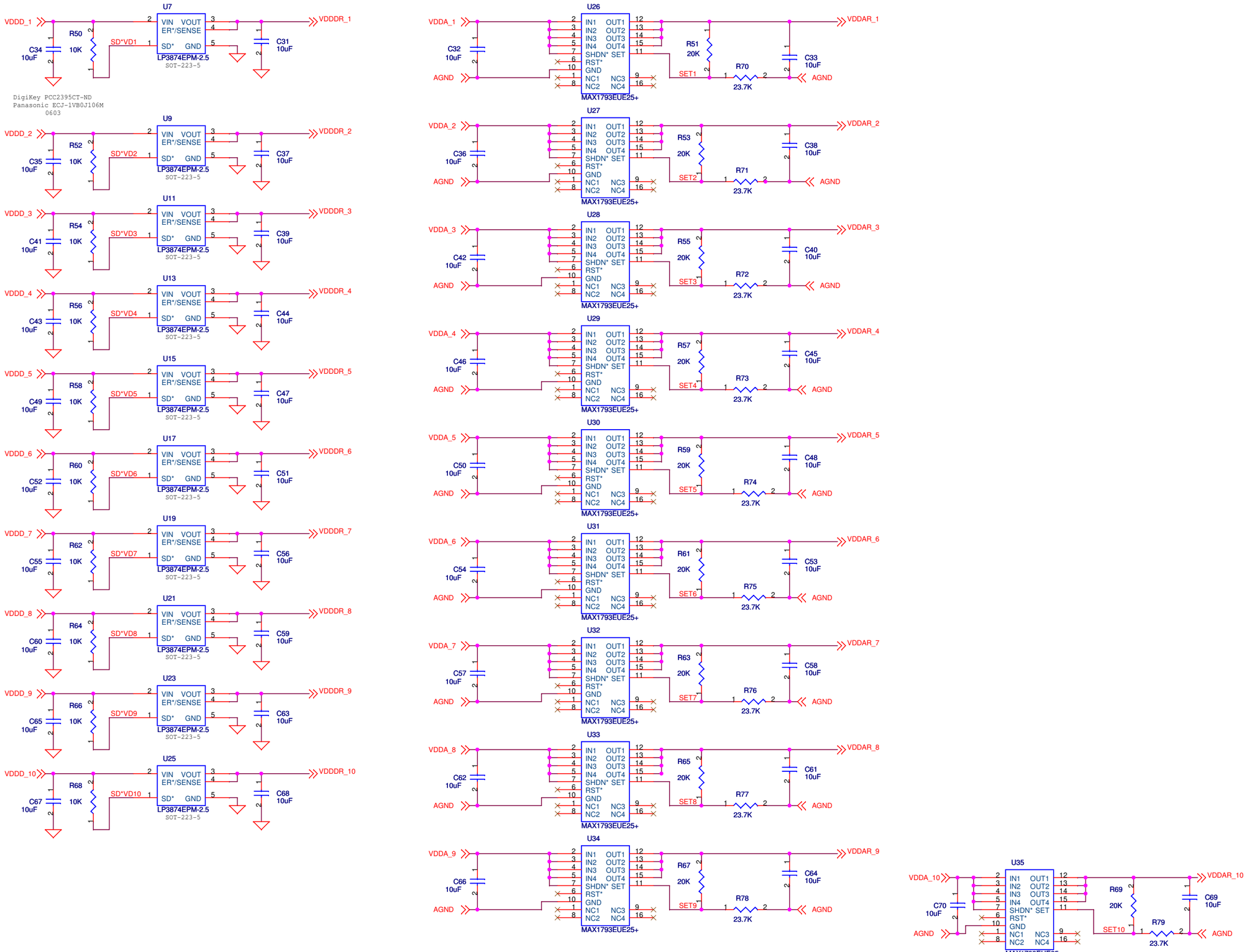

Title	REGULATORS
Size: Custom	Document Number: Jeff Andresen/Guilherme Cardoso/Marcos Turqueti
Rev	<RevCo
Date: Monday, April 02, 2007	Sheet 5 of 5