Fermilab

Managed by Fermi Research Alliance, LLC for the U.S. Department of Energy Office of Science

Application-Oriented Network Traffic Analysis based on GPUs

LDRD Mid-Year Review

Phil DeMar; Wenji Wu; Liang Zhang (SC/CCD/NR)

Jim Kowalkowski; Marc Patermo; Chris Green; Qiming Lu; Mike Wang (SC/SCD/SSA/SSI/TAC)

December 12, 2014

High Level View:

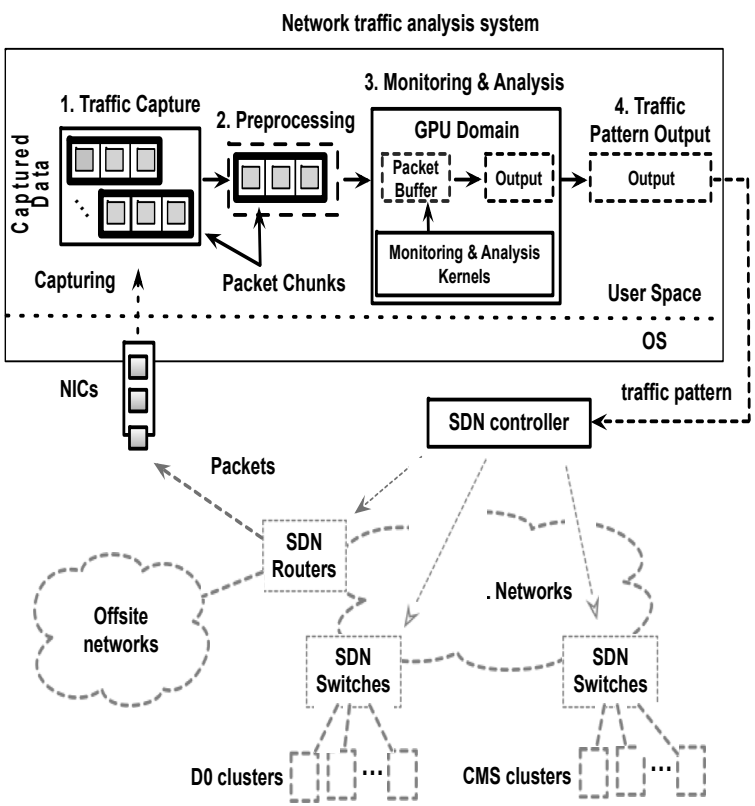

Tool to detect "special" traffic flows:

- Based on real-time packet analysis
- Output results in modified network path characteristics (SDN)

Two major components:

- High-perf. packet I/O engine
- GPU-based network traffic pattern recognition algorithms:
  - Generic GPU libraries for packet manipulation within GPU domain
  - Custom GPU libraries for traffic pattern analysis

System Architecture

Four Types of Logical Entities:

1. Traffic Capture
2. Preprocessing
3. Traffic Analysis
4. Output (SDN controller configuration)

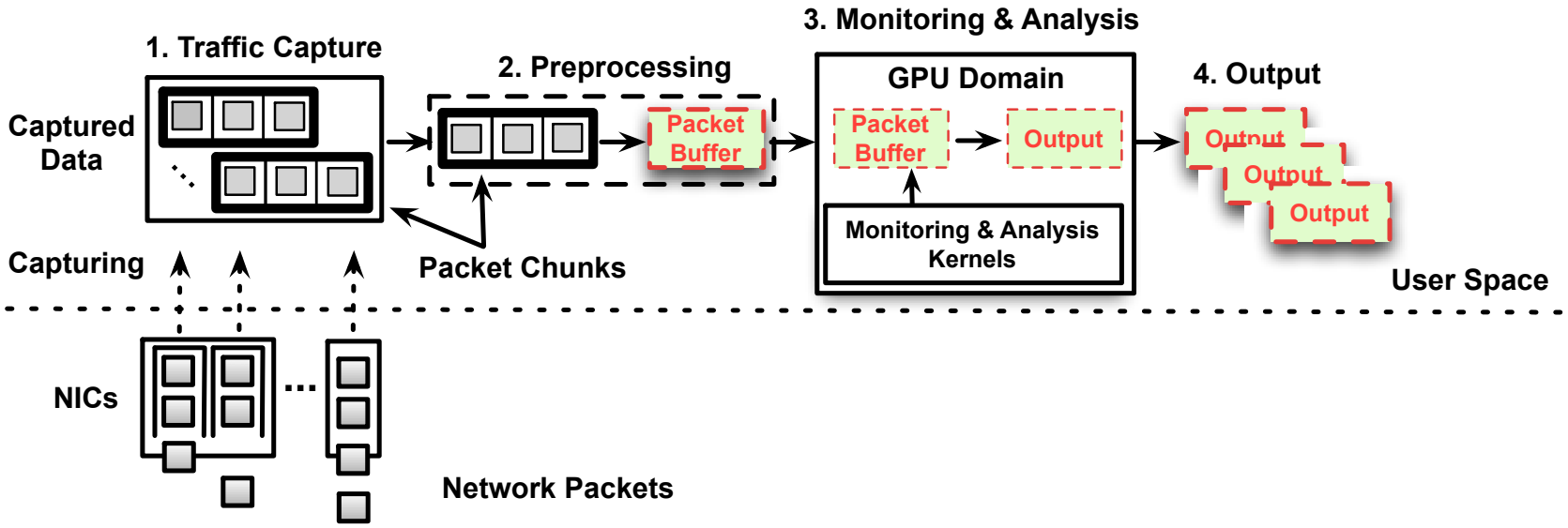

Design Components & Progress (I)

Data Plane – Packet Flow through the System

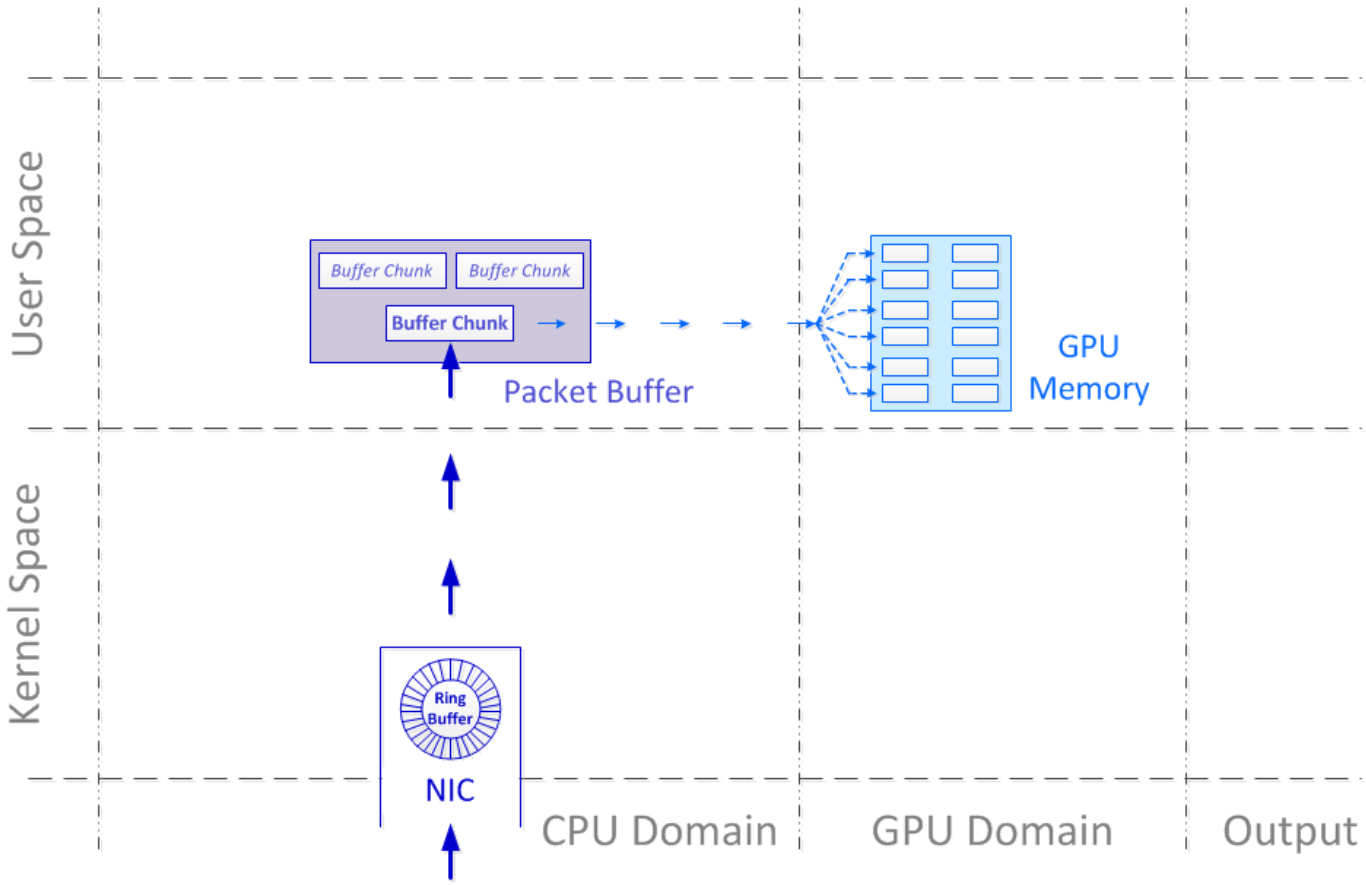

Design Components & Progress (II)

Control Plane – Software Design

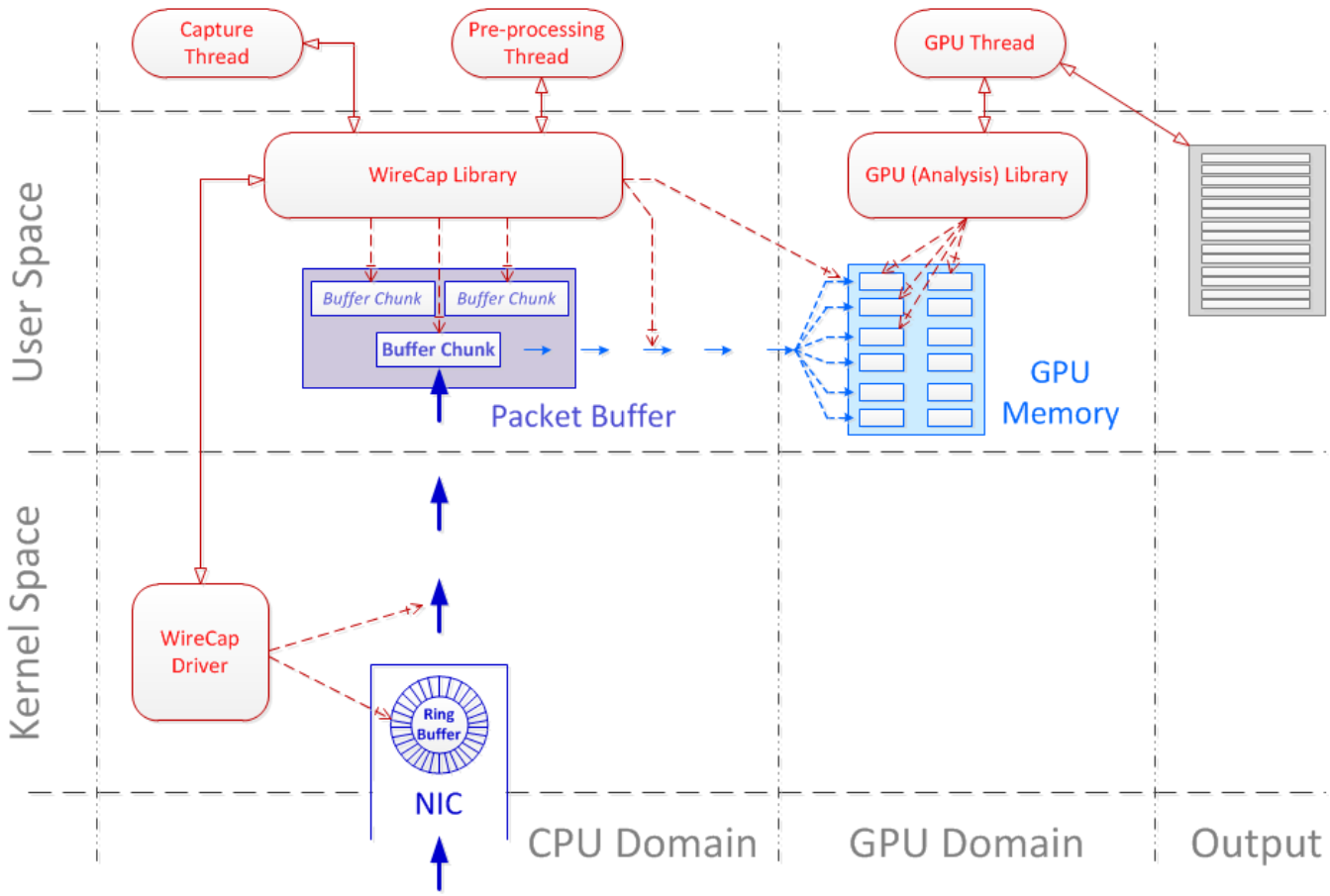

Design Components & Progress (III)

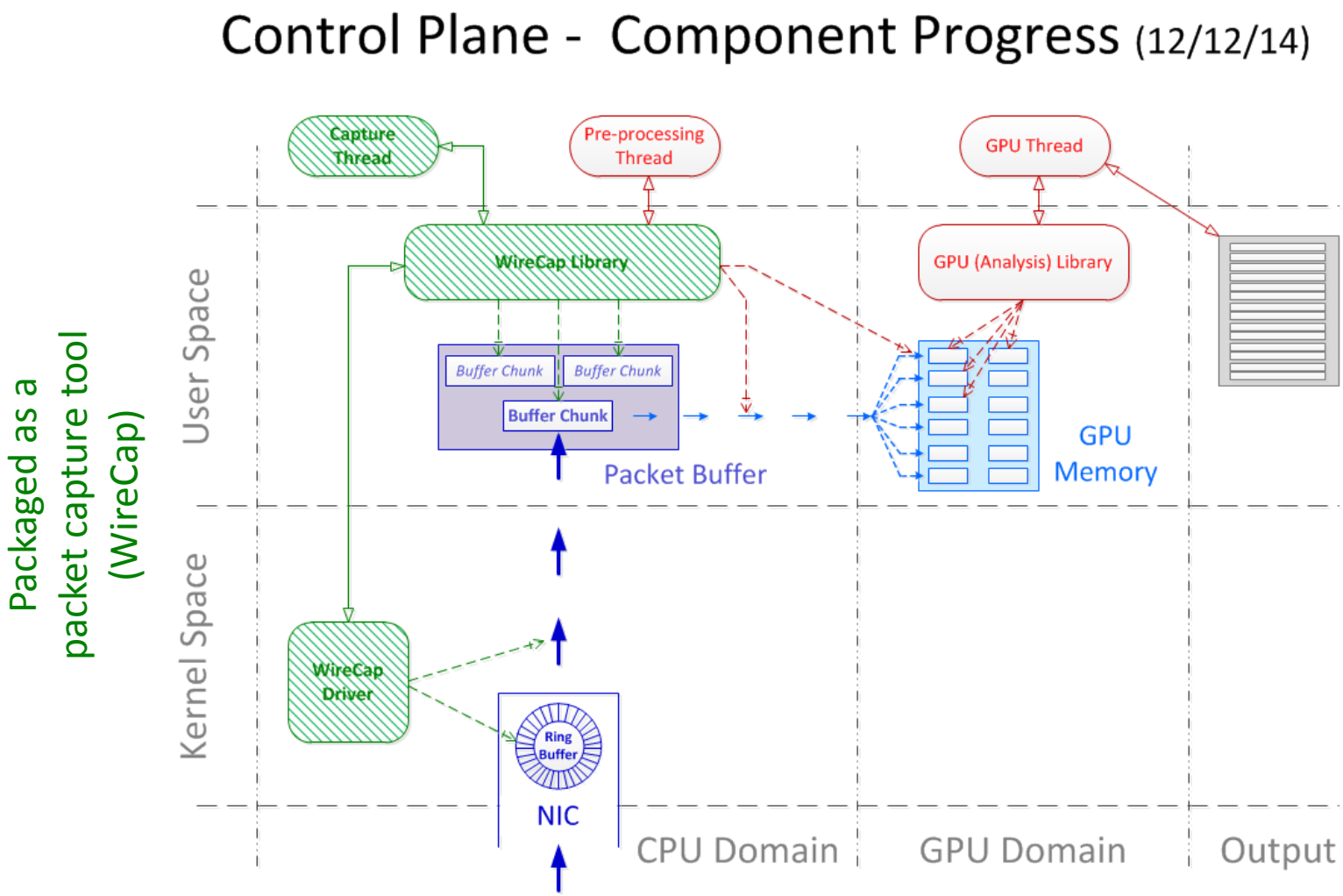

Project Plan vs Progress…

Project Plan in Proposal →

Research Component	Year 1				Year 2			
Research step 1 (Component research/development)								
Design and develop advanced GPU-based algorithms for network traffic pattern recognition								
Implement a generic I/O architecture to move network traffic from the wire to the GPU domain								
Research step 2 (System integration/evaluation)								
Integrate various components of the system and evaluation								
Prototype the proposed use case in terms of timely network path optimization								
Research stop 3 (optional)								
Interface traffic analysis tool to OpenFlow (SDN) controller and demonstrate dynamic network reconfiguration for targeted traffic								

Effort ■ Fine Tuning ■ Resource permitting ■

Didn't start here

Started here instead

- Reversed order of component development from proposal:
  - Quicker start
  - Better efficiency in terms of design and software development
  - Enabled early publication/availability of packet capture engine
- In general, we're following our expected development track
  - Still anticipate a functional prototype by end of year 1

Budget Stuff…

Proposed FY and Total Budgets: (summary of budget page (in dollars))

Budget Plan in Proposal →

	SWF	SWF OH	M&S	M&S OH	Contingency	Total	Spent
FY14	37k	26k	-	-	-	63k	48.7k
FY15	152k	106k	-	-	-	258k	54.4k
FY16	114k	80k	1k	(0.2k)	-	195k	-
Total	303k	212k	1k	-	-	516k	103.1k

- FY14 was underspent by ~$14k:
  - Accounting anomaly (last two weeks in FY14 charged to FY15)
  - Pushed FY15 spending somewhat ahead of profile
- Generally, we expect to adhere to our spending profile
  - Will require the ~1.0FTE effort in FY15 to track our project plan
  - If effort is under-estimated, will slide project plan back in FY16
    - Wouldn't impact project deliverable; just what we can do with it…

Misc.

- Future Directions:
  - Developing a general use platform is an increasing focus point
    - This presents significant challenges within GPU domain
    - Full payload capability becomes more critical
  - Expect to incorporate 40GE NIC capability in FY15-Q2
  - Also working on (re)transmit capability
    - Would open up potential for use with middlebox applications
- Odds & Ends:
  - Provisional patent filed on packet capture engine (WireCap)
    - Still working on software licensing issues & export controls
    - Discussions on filing provisional patent for GPU libraries
  - Already drawing some interest in collaboration (WireCap)

Extra Slides

Packet I/O Engine

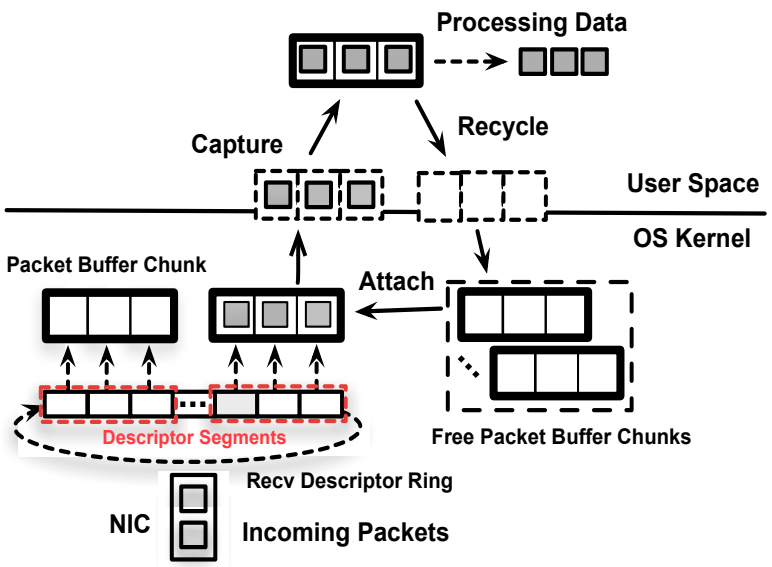

Goal:

- **To avoid packet capture loss**

Key techniques

- **A novel ring-buffer-pool mechanism**
- **Pre-allocated large packet buffers**
- **Packet-level batch processing**
- **Memory mapping based zero-copy**

Key Operations

- **Open**
- **Capture**
- **Recycle**
- **Close**