READ AND SAVE THESE INSTRUCTIONS
INSTRUCTION MANUAL
FOR
ULTRASONIC TYPE HUMIDIFIERS

【MODEL】 BNU2000
BNU3000
BNU4000
BNU6000
BNU8000

LISTED
HUMIDIFIER
41T8

Prior to use, you are requested to read this instruction manual so that correct installation, operation, handling and maintenance can be made.
After you finish, this manual should be kept for future reference.

[CONTENTS]

1.INTRODUCTION ····· P.1
2.SPECIFICATIONS ····· P.2
3.NAME OF PARTS ····· P.3
4.FUNCTION OF PARTS ····· P.5
5.INSTALLATION ····· P.6
6.OPERATION ····· P.9
7.MAINTENANCE INSPECTION AND TROUBLE SHOOTING ···· P.10
8.OUTLINE DRAWING AND WIRING DIAGRAM ····· P.19

Stulz Air Technology Systems, Inc.

INTRODUCTION

WARNING

***THIS UNIT HAVE TO BE INSTALLED ACCORDING TO NATIONAL ELECTRIC CODE AND LOCAL APPLICABLE CODES.**

*THIS IS AN ELECTRIC PRODUCT.
TURN OFF POVER AND UNPLUG NACHINE BEFORE STARTING MAINTENANCE AND INSPECTION. OR, RISKS OF FIRE, ELECTRIC SHOCK, OR INJURY TO PERSONS HAY HAPPEN.

*THE FOLLOWING INSTRUCTIONS FOR "OPERATING CONDITIONS" HAVE TO BE KEPT FOR PROPER OPERATION.

*THE QUALITY OF WATER SUPPLY MUST BE: "DEMORALIZED WATER".

*PAY ATTENTION TO ELECTRIC SHORT. PARTICULARY, AN ACCIDENT MAY OCCUR IF THE AMBIENT WORKING CONDITIONS OF THE HUMIDIFIER ARE BEYOND THE LIMIT OR IF HUMIDIFIER IS SPLASHED WITH WATER.

*NEVER ATTEMPT TO REMOVE THE EXIT PIPE BASE WHILE THE HUMIDIFIER IS OPERATION, THIS MAY RESULT IN THE WETTING OF ELECTRONIC PARTS.

*IF THERE IS A RISK OF WATER SUPPLY PIPING BEING FROZEN, PIPE INSULATION MATERIAL SHOULD BE PROVIDED.

*NEVER APPLY POWER WHEN THE HUMIDIFIER IS OVERTURNED OR UPSIDE DOWN, OTHERWISE DAMAGE TO THE ULTRASONIC NEBULIZER UNIT OR TRANSDUSER MAY RESULT.

*NEVER DROP THE HUMIDIFIER OR APPLY HARD SHOCK TO IT. IT MAY DAMAGE INTERNAL PARTS.

*DRAIN THE WATER IN THE TANK FOR SANITARY REASONS WHEN HUMIDIFIER IS TURNED OFF FOR MORE THAN 3 DAYS.

* OPERATING CONDITIONS

Ambient working conditions	34~104ºF(1~40ºC); Less than 90%RH
Supply water quality	Demineralized water; Resistivity higher than 1.0MΩ
Water supply pressure and temperature	3~75psi(0.02~0.5MPa), 40~104ºF(5~40ºC)
Allowable voltage range	Within ±10%
Insulation resistance	100MQ or more (excluding Solidstate components)
Dielectric voltage threshold	Operational when AC1500V is applied for 1 minute (excluding Solidstate components)

2.SPECIFICATIONS

		Specifications.				
Type		Ultrasonic humidifier BNU				
Model		BNU2000	BNU3000	BNU4000	BNU6000	BNU8000
Nebulizing capacity[1bs/hr(kg/h)]		4.4(2.0)	6.6(3.0)	8.8(4.0)	13.2(6.0)	17.6(8.0)
Nos. of Ultrasonic nebulizer unit		4	6	8	10	16
Rated voltage		Single-phase AC48V, 50/60Hz				
Rated power consumption(W)		150	220	285	430	565
Min. circuit ampacity(A)		3.3	4.8	6.2	9.2	12.0
Max. fuse size(A)		10	10	10	15	15
Motor each, FLA(A)		0.54	0.87	0.92	0.54, 0.92	0.92, 0.92
Operation weight[lbs(kg)]		24.2(ll.0)	30.8(14.0)	35.2(16.0)	48.4(22.0)	61.6(28.0)
Electrical Characteristic	Allowable voltage range	Within ±10%				
	Insulation resistance	100MQ or more (excluding Solidstate components)				
	Dielectric voltage threshold	Operational when AC1500V is applied for 1 minute (excluding Solidstate components)				
Ambient working conditions		34~104oF(1~40C); Less than 90%RH				
Operating conditions	Water quality	Deminerailzed water; Resistivity higher than 1.0 MQ				
	Water supply pressure	3~75psi(0.02~0.5MPa)				
	Water supply temperature	40~104F(5~40°C)				
Contents of package		1)Humidifier body ·····1 unit 2)Ring nut ·····1 set				
Other parts to be provided.		Humidistat Water supply valve Water supply tube[1/4"(φ6)] Water supply strainer(100mesh degree) Power source and Control box.				
(Note)		1) Calcium, magnesium or other minerals that may be contained in the supply water are atomized into the air together with the mist and may form white powder after the water has evaporated. Therefore, demineralized water should be used at all time. 2) The nebulizing capacity of the Transducer in the Ultrasonic nebulizer unit decreases gradually with use. It should usually be changed after about 10,000 hours of operation although the unit may continue to run as long as its effective capacity meets the particular requirements.				

3.NAME OF PARTS

PART OF MIST GENERATOR

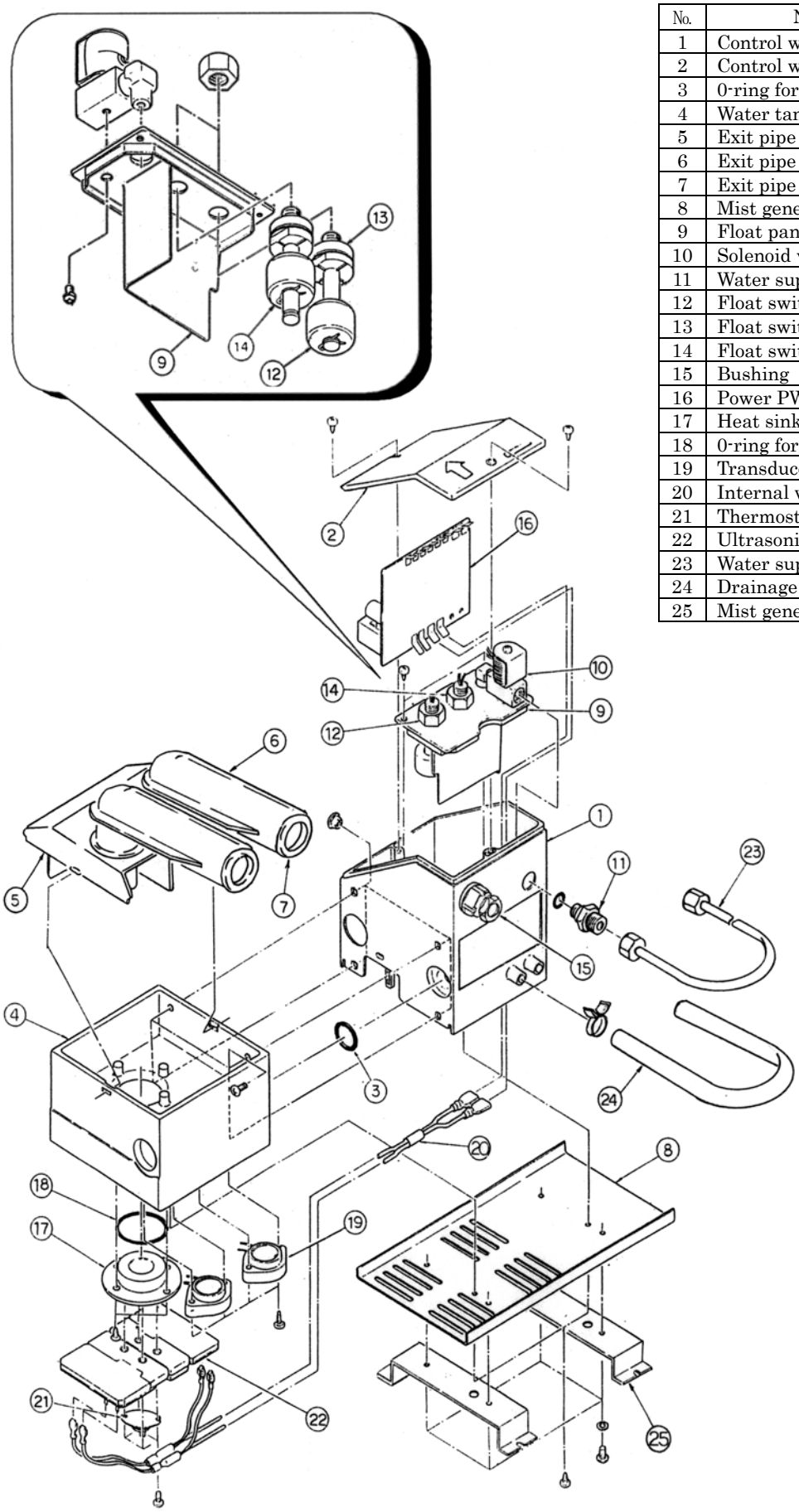

No.	NAME Of PARTS
1	Control water tank
2	Control water tank cover
3	0-ring for water tank
4	Water tank
5	Exit pipe base
6	Exit pipe
7	Exit pipe grommet
8	Mist generator bottom
9	Float panel
10	Solenoid valve
11	Water supply inlet
12	Float switch for low water level
13	Float switch gasket
14	Float switch for water supply
15	Bushing
16	Power PWB
17	Heat sink
18	0-ring for heat sink
19	Transducers
20	Internal wiring
21	Thermostat
22	Ultrasonic nebulizer print plate
23	Water supply piping
24	Drainage hose
25	Mist generator's mounting foot

PART OF HUMIDIFIER

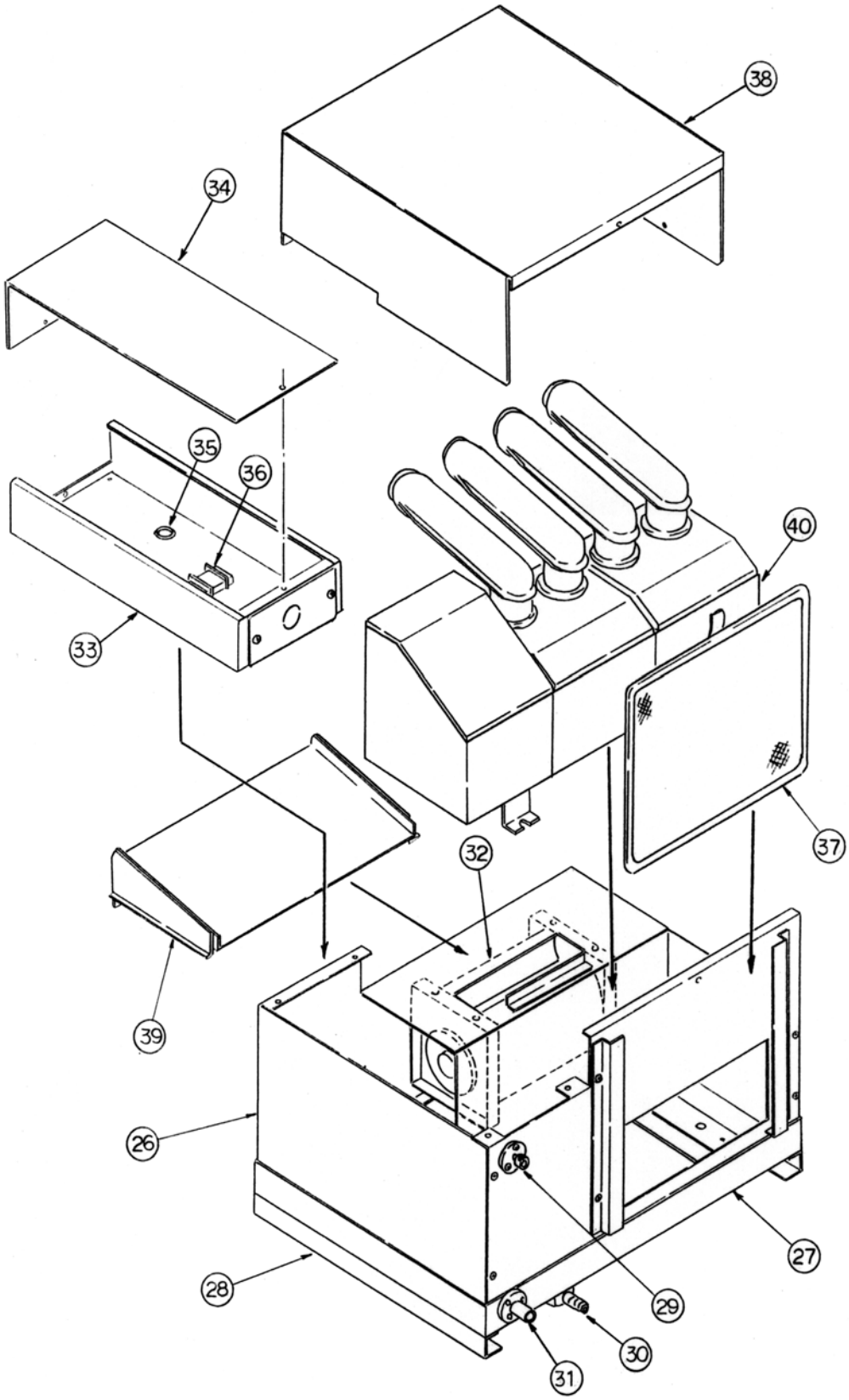

No.	NAME OF PARTS
26	Enclosure
27	Enclosure bottom
28	Mounting foot
29	Water supply joint
30	Ovreflow pipe
31	Drainage joint
32	Fan
33	Junction box
34	Junction box cover
35	Bushing
36	Terminal block
37	Filter
38	Enclosure cover
39	Air flow guide panel
40	Mist generator

4.FUNCTION OF PARTS

Fan

It blows out the generated mist.

Filter

It removes suspended particle of dust and prevents the dust from entering the Water tank.

Ultrasonic nebulizer unit

At the bottom of each of these compact units is an oscillator and amplifier circuits with a transducer.
The AC48V supply is oscillated and amplified to a high-frequency electric power needed to vibrate the Transducer. The resultant ultrasonic vibrations are directed to the water surface, thus, atomizing the water.

Power PWB and Float switch for low water level control

Operating the humidifier when the tank water level is below the top surface of a Transducer will affect the Transducer and the circuitry in the Ultrasonic nebulizer unit. To prevent such a dry run, a float switch and a Power PWB are used. If the water level falls below a safety level for any reason, the Float switch contact turns OFF, setting OFF the Relay and thus cutting off the power supply to the unit.

Solenoid valve and Float switch for water supply

For maximum atomization, it is essential that the water level in the tank be maintained as constant as possible.
To meet this requirement, automatic water supply control by a Solenoid valve and a Float switch is employed. In this system, when the water level in the tank falls below the designed level, the Float switch contact turns ON and the Solenoid valve opens to supply water to the tank.
When the designed water level is attained, the Float switch contact turns OFF, closing the Solenoid valve.

Water supply valve
(to be provided by user)

This valve should be installed slightly upstream from the water supply strainer for service and maintenance.

Water supply tube
(to be provided by user)

This connects the water supply strainer with the Water supply joint.

Water supply strainer
(to be provided by user)

This wire mesh prevents suspended particles from entering the Water tank.
Mesh should be cleaned periodically.

5.INSTALLATION

CAUTION ON INSTALLATION

* THE QUALITY OF WATER SUPPLY MUST BE DEMORALIZED WATER.
  (RESISTIVITY HIGHER THAN 1.0MΩ.)

* THE HUMIDIFIER MUST BE MOUNTED IN A LEVELED HORIZONTAL POSITION.

* THE POWER SOURCE SYSTEM MUST BE PROVIDED WITH A CIRCUIT BREAKER.

* ALL PIPE JOINTS ARE CONNECTED CORRECTLY AND SECURELY.

* WE RECOMMEND THAT THE WATER SUPPLY TUBE TO THE HUMIDIFIER SHALL BE COVERED BY THERMAL INSULATION MATERIAL.

* THE POWER SOURCE HAS A VOLTAGE OF AC48V.

* ALL OTHER ACCESSORIES ARE ASSEMBLED AND MOUNTED PROPERLY AND SECURELY.

* GROUND IS REQUIRED.

Recommendation/Warning

Humidity control can only be achieved if the room has proper vapor barriers installed. Walls, ceiling and floors must be sealed to stop the migration of moisture.

5-1. Installation of Humidifier body

* In selecting the installation place, attention should be paid to the airflow in the room so that the mist atomized can be uniformly diffused throughout the room.

* When you install the Humidifier, use hanging bolts or bracket.

* The Humidifier must be installed leveled horizontally and secured by screws.

* If any obstacle exists at cross range in the atomizing direction (15ft or less), the mist will condense to become water droplets.

* In any case, the installation should be made in such a way that the Humidifier can be easily removed for future maintenance and inspection.

IMPORTANT: 1) In order to prevent water droplets, confirm that the mist never reach a ceiling in any case.

2) For unobstructed water flow, confirm that all water piping (water supply, drainage and overflow) are not clogged in any case.

Ceiling system

1) Use a threaded hanging rod with 5/16"~1/2" diameter. Use anchor bolts to secure to concrete type ceilings if applicable.

2) Use two steel angle profiles(1 1/2"x1 1/2"x1/8")each, or stronger to connect to threaded rods using bolts from all four corners as shown.

3)Distance between front and back threaded rods is 9 7/8" center to center as shown. Allow the angle profiles to be about 4" longer than the (L) dimension for the humidifier being installed. Refer to the (L) dimension in the humidifier outline drawing.

4)Use 3/16" bolts to secure humidifier to the angle profile in four holes provided on the humidifier mounting bracket.

5) Allow a minimum distance of 18" to a maximum of 40" between top of humidifier and ceiling.

Bracket system

1) Use a 1 1/2" x1 1/2"x1/8" angle steel profile to construct bracket system as a minimum. Use the following dimensions to butt weld the profile:

A: 15"~20" B: Min. 12" C: Min. 1"~2"
D: Equal to (P) dimension found on humidifier outline drawing.

2) Secure angle bracket to a concrete wall or stud using a bolt 5/16"~1/2".

3) Humidifier is secured to angle bracket using a 3/16" bolt in four locations.
Front face of humidifier should not hang over bracket edge as shown.

(Fig. A) Installation of Humidifier

Ceiling system Bracket system

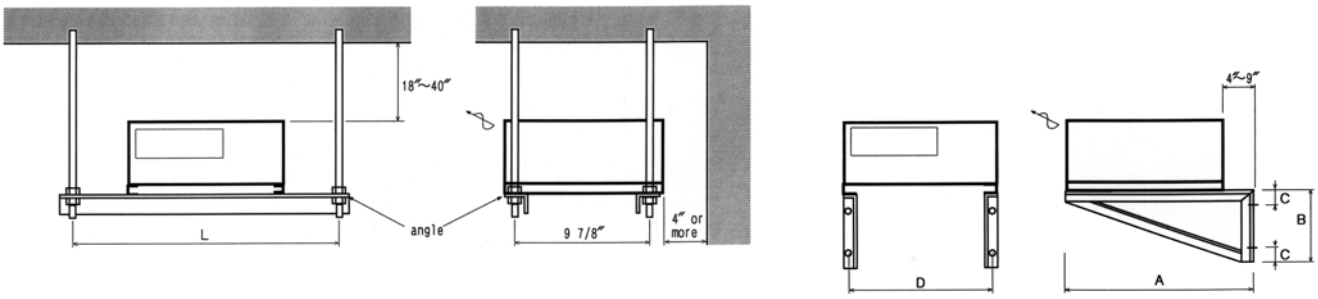

5-2. Water supply and overflow piping

* Demineralized water(Resistivity higher than 1.0MΩ) must be used.
  Water supply valve must be provided for each humidifier used on the water pipe line for maintenance and service.

* After the water supply valve is installed, flushing should be done by supplying water. This is a necessary work to prevent contaminants and oil in the piping from entering the Humidifier.

* Install a water supply strainer in the water supply piping and connect the piping to the Humidifier by means of the Water supply tube [1/4"(6mm O.D.), ring joint brass type] provided by user. (See Fig. B)

* Tightening, torque: about 90lbf-in(10N-m)

(Fig. B) Joint of Water supply tube (compression fitting)

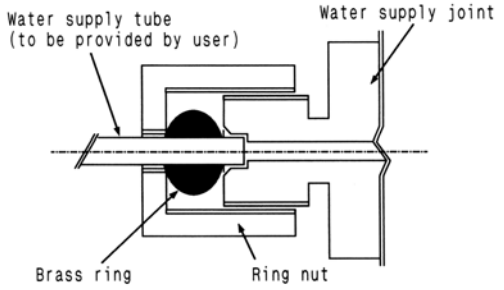

* The overflow pipe is provided only for safety precaution.
  Under normal operating conditions, water never flows into the overflow pipe.

* If it is impractical to discharge the overflow at the location of the humidifier body, extend the overflow pipe to a suitable discharge spot, inserting a rubber hose into the overflow pipe [1/2"O.D.(12mm O.D.)].

5-3. Connecting to electrical power source

* The rated voltage of power source applied to the Humidifier body is AC48V /single phase.

* The power source system must be provided with a Circuit breaker for safety.

* The humidistat should be installed at a well-ventilated place where the changes in humidity of the room can be accurately sensed.

* Ground is required.

Humidifier have to be used with a listed STULZ AMERICA INDUSTRIAL Control panel,

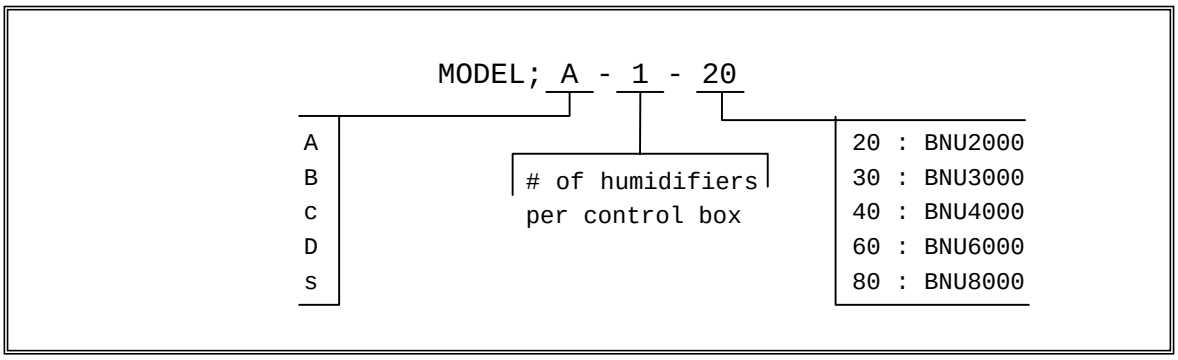

6.OPERATION

CAUTION ON OPERATION

*** CHECK REGULARLY DURING OPEARATION THAT MIST IS ATOMIZED AND CARRIED INTO THE AIR PROPERLY.**

*** DO NOT REMOVE THE EXIT PIPE BASE DURING OPERATION.**

*** DRAIN THE WATER IN THE WATER TANK FOR SANITARY REASON IN CASE HUMIDIFIER IS TURNED OFF FOR MORE THAN 3 DAYS.**

BEFORE USING THE HUMIDIFIER AFTER PROLONGED PERIOD OF INACTIVITY, ALSO CHECK:

‡ THE WATER SUPPLY STRAINER IS NOT CLOGGED WITH DIRT AND OTHER FOREIGN MATERIALS

‡ THE HUMIDIFIER BODY IS SECURED IN POSITION AND IS IN GOOD OPERATING CONDITION.

6-1. Operation

1) Open the water supply valve.

2) Turn ON the Circuit breaker.

3)Set the room humidistat to a desired humidity.

4) If the humidistat is ON, the humidifier should operate. Water will be supplied to the water tanks and atomization begins when the tank is filled to a required level.

5) The mist atomized is carried by fan into the air, thus humidifying the surrounding air.

6) Thereafter, the water level in the water tank is maintained constant by a Float switch for water supply and a Solenoid valve, and the humidity in the room is controlled by the humidistat for the set value.

7) If the water level in the Water tank drops during operation below the safety level for any reason, the operation of the Ultrasonic nebulizer unit will be discontinued by the Float switch for low level cut off.

7.MAINTENANCEINSPECTION ANDTROUBLE SHOOTING

CAUTION ON MAINTENANCE INSPECTION AND TROUBLE SHOOTING

* TURN OFF CIRCUIT BREAKER AND CLOSE THE WATER SUPPLY VALVE BEFORE STARTING MAINTENANCE.

* THE TRANSDUCER IS A VERY DELICATE PART.
  ESPECIALLY WHEN THE WATER TANK INTERIOR IS CLEANED, DUE CARE MUST BE TAKEN SO THAT IT WILL NOT BE SCRATCHED ON THE SURFACE WITH A SCREWDRIVER, ETC.

* NEVER APPLY THE POWER TO THE ULTRASONIC NEBULIZER UNIT WITHOUT TRANSDUCER.

* NEVER MEASURE INSULATION RESISTANCE AND DIELECTRIC VOLTAGE THRESHOLD OF THE ELECTRONIC PARTS.

* WHEN PARTS ARE CHANGED, GENUINE STULZ PARTS MUST BE USED.

* USE APPROPRIATE TOOLS FOR EACH PART AND DO NOT OVERTIGHTEN OR UNDERTIGHTEN.

7-1.Work description and necessary tools

ITEM	INTERVAL	NECESSARY TOOLS
Cleaning of the Filter. {See 7-2. [1] on page 14}	Every 1 month. However, the interval should be shortened if ambient working conditions were hard.	None
Cleaning and inspection of the Water tank interior and electric component. {See 7-2. [2] on page 14}	Every 6 months. However, the interval should be shortened if ambient working conditions were hard or supply water quality was not good.	* 1 Phillips screwdriver * 1 Adjustable crescent wrench * [5inch(125mm) degree] * 1 Tin snips * 1 Soft cloth
Changing of Ultrasonic nebulizer unit and Heat sink. {See 7-4. [1] on page 22}	Transducer After about-----10,000 hours of operation. Nebulizer print plate-----If damaged or causing problems. Heat sink-----If damaged or eroded.	
Changing of Solenoid valve, Float switches and Power PWB. {See 7-4. [2] on page 23}	If damaged or causing problems.	
Changing of Fan. {See 7-4. [3] on page 25}		

7-2. Regular Maintenance inspection

[1] Cleaning of the Filter

Interval: Every 1 month or depending on room contamination,
Tools: None

1) Turn OFF the power to the humidifier and close the water supply valve.

2) Pull Filter out and clean it.

3) Put the Filter back. (Fig. 1)

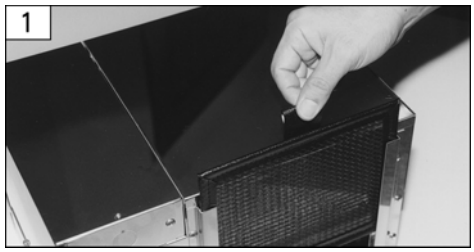

[2] Cleaning and inspection of the water tank interior and electric component

Interval: Every 6 months or after prolonged period of inactivity.

Tools: 1 Adjustable crescent wrench [5 inch(125mm) degree]
1 Phillips screwdriver
1 Soft cloth

1) Turn OFF the power to the humidifier and close the water supply valve.

2) Provide necessary tools.

3) Remove the drain cap and drain the water in the tank. After you finish the drainage, refit the drain cap as it was. (Fig. 2) Pay attention about water spilling from the Drainage joint because water may remain in the Water tank.

4) Use a wrench to loosen the ring nut of the water supply joint and remove the water supply tube. (Fig. 3)

5) Remove the Junction box cover and the Power cables from the terminal block. Then remove screws of the Conduit panel.

6) Move the Humidifier body to a place where you can work on it easily.

7) Remove four screws and then Junction box.(Fig. 4)

8) Remove screws for Enclosure cover.(Fig. 5)

9) Remove Air flow guide panel by removing screws. (Fig. 6)

10) Remove Exit pipe base and check the interior of Water tank. (Fig. 7)

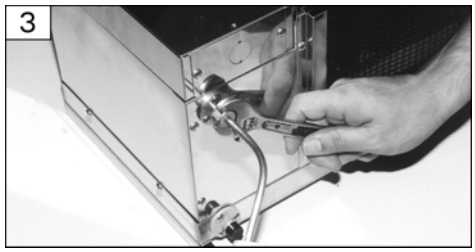

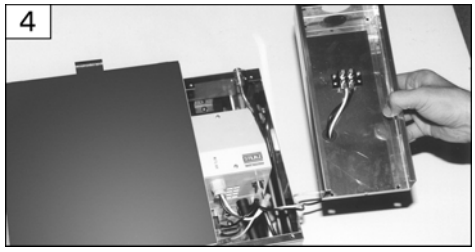

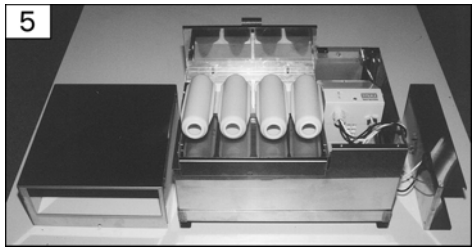

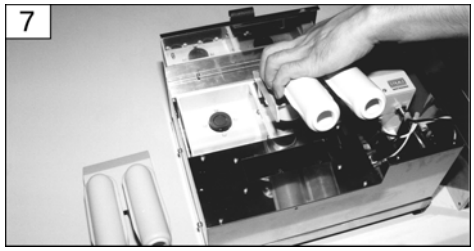

11) Clean the interior by wiping with a soft cloth . Be careful not to scratch the surface of the Transducer or splash water on the electrical parts. (Fig. 8)

12) In case that there is any damage or scaling on the surface of the Transducer, change it referring to "7-4. [1] " page 22.

13) Remove the Control water tank cover. Check the inside of the Control water tank to confirm that; No parts are leaking No condensation No water leakage from joint of the Solenoid Valve There is no discoloration, deformation or deterioration of the Power PWB or its Relay. There is no damage to internal wiring. (Fig. 9)

14) Regarding the cleaning of Float switches, remove the Float panel, confirm by moveing its float smoothly and clean the float reffering to "7-4. [2] " page 23.

15) Reassemble.

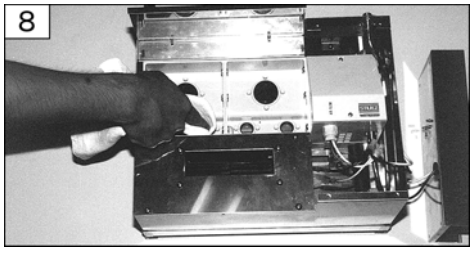

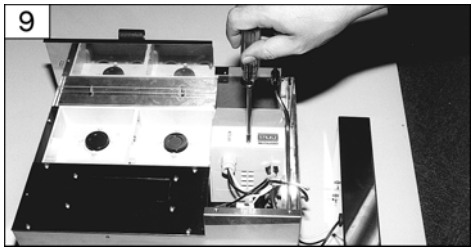

7-3.Fai lure/Causes/and Remedy

*** Should any failure occur, take necessary corrective steps as per the following table**

*** As a rule, the power must be turned OFF when trouble shooting is done, but if it is absolutely necessary to check when the power is supplied, extreme attention must be given to electric shock and short-circuiting.**

(1) First, the humidifier and its surrounding should be checked.

Failure	Cause		Checking	Remedy
No mist is generated.	Power supply system	Circuit breaker is turned off.	Visually check.	Turn on.
		Humidistat is not on.	Setting of the humidistat scale is low.	Up the scale of humidistat.
			Wiring to humidistat is not correct.	Correct.
	Water supply piping system	water supply valve is closed.	Check opening/closing of the valve.	Open the valve.
		Water supply strainer is clogged.	Loosen and remove the cap of strainer and visually check the interior.	Clean the strainer.
	Other	Operation of safety thermostat due to increase in ambient temperature.	Check if the ambient temperature and water temperature are within specified range.	Correct.
Mist output is too low.	Power supply system	Supply voltage is low.	Check voltage input(H,G) terminals.	Correct the voltage.
	Water supply control system	Operation water level is not kept and overflow occurs.	Visually check.	See (3) below.
	Other	Humidifier is not set level.	Visually check.	Correct.
		Filter clogged.	Pull out the Filter and visually check.	Clean the Filter.
Mist is heavy.	Power supply system	Supply voltage is high.	Check voltage input(H,G) terminals.	Adjust the mist quality with the voltage adjusting.

(2) If the cause can not be located through the above check, remove the Exit pipe and check the interior of the Water tank.

Failure	Cause	Checking	Remedy
No mist is generated.	* Dust or foreign material are accumulated in the Water tank.	Visually check the interior of the Water tank.	Clean the interior of the Water tank.
Mist output is too low.	* Dust and foreign material are accumulated in the Water tank.		
	* Scale deposited on Transducer surface.		Clean interior of Water tank and change the Transducer.

(3) If the cause can not be located through the above check, some parts may be faulty.
Check the Interior of the Mist generator.

Failure	Cause		Checking	Remedy
No mist is generated.	Water supply control system	Float switch for water supply is faulty.	Drain the Water tank, remove the Relay plate terminal(FS1), and check continuity of the Float switch.	If there is no continuity, change.
		Sticky Float switch for water supply.		If the function cannot be recovered after cleaning, change.
		Water supply solenoid valve is faulty.	Even if the Water tank is drained and voltage of (SV) terminal on the Relay plate is AC48V, no water supply is made.	Change the Solenoid valve.
	Oscillation control system.	Float switch for low level cut off is faulty.	With the Water tank filled with water, remove the terminal (FS2) to the Relay plate and check continuity of Float switch.	If no continuity exists, change.
		※Sticky Float switch for low level cut off.		If the function is not recovered after cleaning, change.
	Fan	Disconnected lead cables of Fan.	Visual check.	Connect.
		Out of order.	Fan don't operate when AC48V is applied.	Change the Fan.
Mist output is too low.	Water supply system (overflow)	Float switch for water supply is faulty.	When the Water tank is filled with water up to the overflow pipe, remove the terminal (FS1) to the Relay plate and check that there is no continuity of Float switch.	If there is continuity, change.
		※Float switch for water supply is sticking.		If the function is not recovered after cleaning, change.
		Water supply solenoid valve is faulty.	Even after power is turned off, overflow occurs.	Change the Solenoid valve.

(4) Consumable parts

Failure	Cause	Checking	Remedy
No mist output or mist output is too low.	Transducer life is close to end.	The life of Transducer is about 10,000 hrs of operation.	Change the Transducer.

Remarks

* The causes of failures marked ※ can be sufficiently prevented through periodical maintenance/inspection. See "7-2. Regular Maintenance Inspection".
* If the Humidifier is operated for a long time after Transducer expected life, the nebulizer print plate may fail. The Transducer should be changed periodically using the operation of 10,000 hours as a yardstick.
* If the cause cannot be located through the above checking, please contact your supplier or installer of the unit.
* If the humidifier system is supplied with a conductivity meter control, make sure that meter is operating properly and that the water supply to the humidifier is within the recommended guide lines for mineral content.

7-4.Part changing procedure

Before starting following procedure, it is necessary to do Preparation([A]) and Confirmation after Reassembling([B]) as mentioned below.

[A] Preparation

1) Turn OFF the power to the humidifier and close the water supply valve.

2) Provide necessary tools.

3) Remove the drain cap and drain the water in the tank. After you finish the drainage, refit the drain cap as it was.(Fig. 10)

4) Use a wrench to loosen the ring nut of the water supply joint and remove the water supply tube.

5) Remove the Junction box cover and the Power cables from the terminal block. Then remove screws of the Conduit panel.

6) Move the Humidifier body to a place where you can work on it easily.

7) Remove four screws and then Junction box. (Fig. 11)

8) Remove screws for Enclosure cover. (Fig. 12)

9) Remove Airflow guide panel by removing screws. (Fig. 13)

10) Remove Exit pipe base and check the interior of Water tank. (Fig. 14)

11) Remove screws for Fan base removal. (Fig. 15)

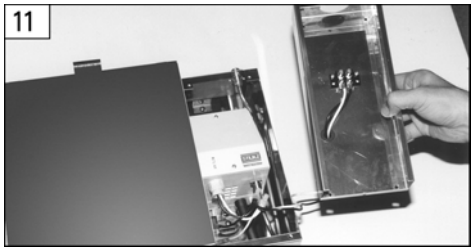

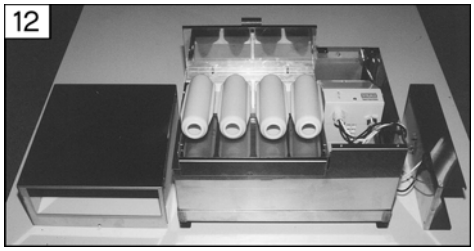

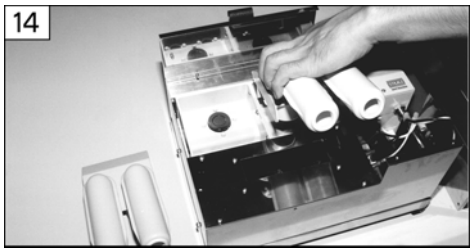

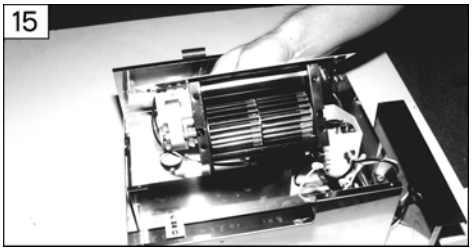

12) Remove the Control water tank, and pull off the 2 TAB-ON terminals (H and G) on the Power PWB. (Fig. 16.17)

13) Remove the Water supply piping by loosening water joint in two places. (Fig. 18)

14) Loosen Hose clamp and remove Drainage hose. (Fig. 19)

15) Remove screws (fan side) for Mist generator's mounting foot and remove the Mist generator. (Fig. 20)

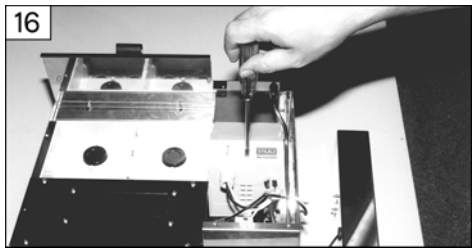
16

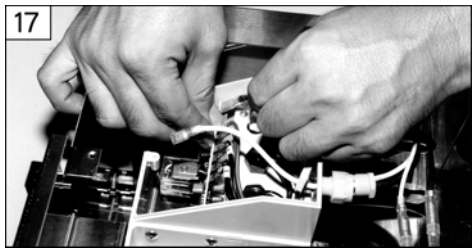
17

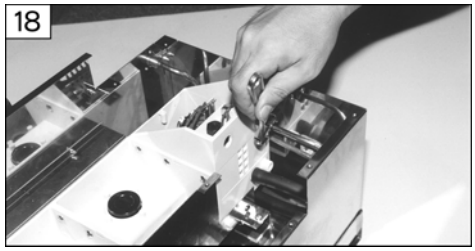
18

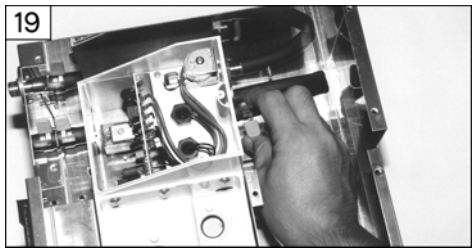
19

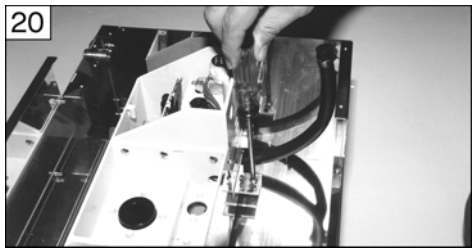
20

[B] Confirmation after Reassembling

1) Confirm all points mentioned below. All screws for Transducers and Nebulizer print plate are secured properly. All lead wire and cables are secured properly. There is no discoloration, deformation or deterioration of the Power PWB or its relay. Especially, pay attention to lead wire of the Fan. There is no damage on all wires and cables. Mist generator is secured properly. Its mounting foot is secured by screws.

2) After reassembling, supply water and power for operation. During this trial operation, check that mist is blown from all Exit pipes and there is no water leakage.

[1] Changing of Ultrasonic nebulizer unit and Heat sink

Interval: Transducer---After about 10,000 hours of operation Nebulizer

Print plate If damaged or causing problems.
Heat sink If damaged or eroded.

Tools : 1 Phillips screwdriver
  : 1 Adjustable crescent wrench [5inch(125mm) degree]

1) Refer " [A] Preparation 1)~15)" a make sure you follow it.

2) Turn the Mist generator upside down and remove the Mist generator bottom by loosening screws. (Fig. 21)

3) Pull OFF the 2 TAB-ON terminals of the Transducer to the Nebulizer print plate (yellow and orange wires) and remove the Transducer. (Fig. 22)

4) Remove the Transducer by loosening 2 screws. (Fig. 23)

5) Install new Transducer on the bottom of the water tanks and secure with screws. Properly insert the Transducer packing into pit on the bottom of the Water tank to prevent damage.

6) Connect the lead wires to the terminal of the Nebulizer print plate. Be careful not to install the Transducer in the wrong direction or misconnect Color-Coded lead wires. The yellow lead is connected to the terminal marked YEL and the orange lead is connected to ORG.

7) When changing the Nebulizer print plate, pull off the 2 TAB-ON terminals of the Transducer (yellow and orange) and the 2 TAB-ON terminals of the Power source (white and black).

8) Loosen the screws securing the Nebulizer print plate to the Heat sink and remove the Nebulizer print plate. (Fig. 24)

9) Change with a new one and connect the lead wires. Spread silicone grease or put a silicone rubber sheet on the surface of the Heat sink to promote heat transmission.

10) When changing the Heat sink, remove the 2 Nebulizer print plates on it. Loosen the 4 screws securing it and remove the Heat sink. (Fig. 25)

11) Change with a new Heat sink and 0-ring for Heat sink. Tighten screws securely and take care not to damage the 0-Ring. (Fig. 26)

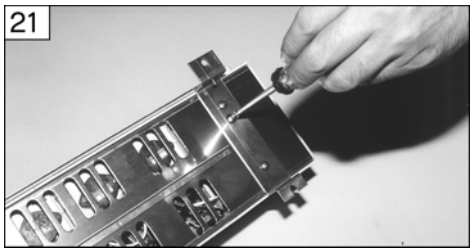
21

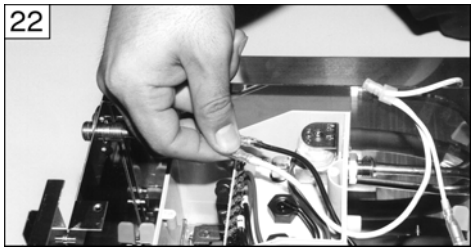
22

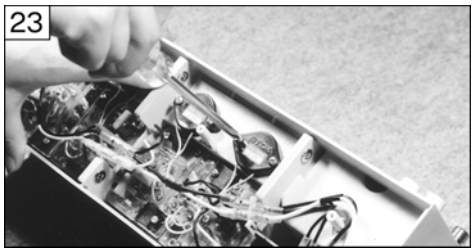
23

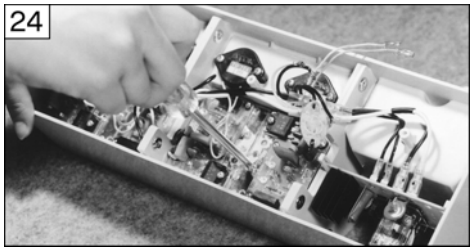
24

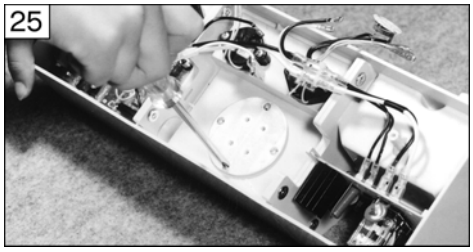
25

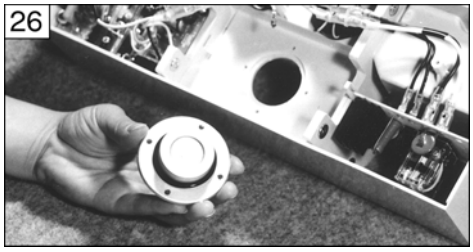
26

[2] Changing of Solenoid valve, Float switches and Power PWB

Interval: ····· If damaged or causing problems.

Tools ····· : 1 Adjustable crescent wrench[5inch(125mm) degree]
: 1 Phillips screwdriver
: 1 Tin snips

1) Refer " [A] Preparation 1) ~ 15)" a make sure you follow it.

2) Cut the band binding the 6 wires with the tin snips. (Fig. 27)

3) Pull off the 2 TAB-ON terminals of the changing Float switches or Solenoid valve to the Power PWB. (Fig. 28)

Color and mark of the cable:

F.S. for low level	Black, [2]
F.S. for water supply	Black, [1]
Solenoid valve	Blue, no mark

4) Loosen the Nipple for Water supply inlet of the Solenoid valve and remove it. (Fig. 29)
Nipple for Water supply inlet have to be loosened slowly.

5) Loosen 2 screws of the Float panel and remove it with the Solenoid valve and Float switches. (Fig. 30)

6) When changing the Solenoid valve, loosen screw on the reverse side of Float panel. (Fig. 31)

7) When changing Float switches, loosen the nut on the old Float switch and remove it. (Fig. 32)
Install the new Float switch and secure it with its nut. There are two types of Float switch: one for water supply and the other for low level. Take care not to confuse the two during installation, because their forms are similar but the functions are different. (fig. 33)

8) When changing Power PWB, pull off the 2 or 4 TAB-ON terminals of the bottom of Power PWB after removing the Mist generator bottom. (Fig. 34)

9) Pull off the Power PWB and insert a new one. (Fig. 35)

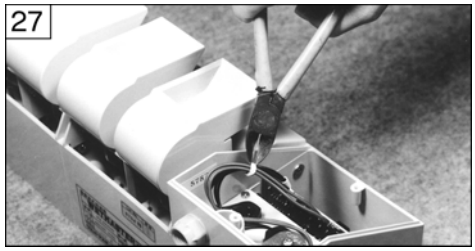
27

28

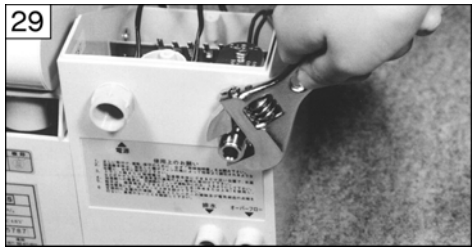
29

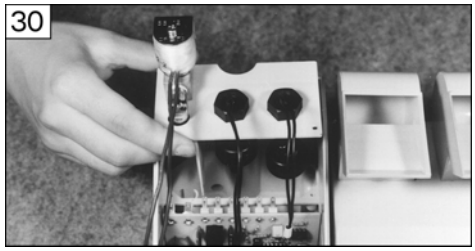
30

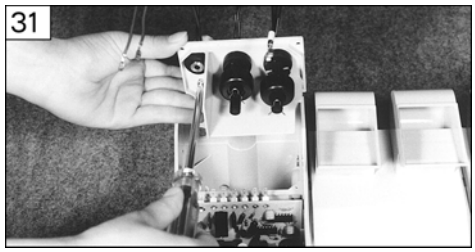
31

32

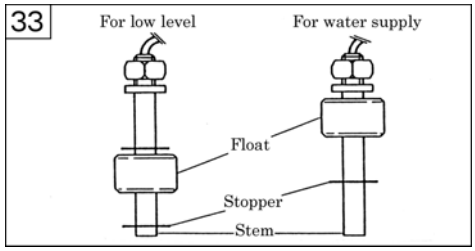

33

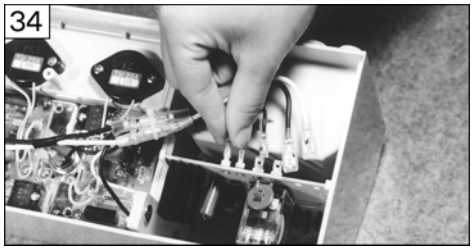
34

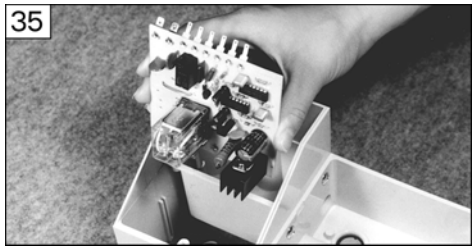
35

[3] Changing of Fan

Interval: ····· If damaged or causing problems.

Tools ····· : 1 Adjustable crescent wrench[5inch(125mm) degree]
: 1 Phillips screwdriver
: 1 Soft cloth

①Refer " [A] Preparation 1) ~ 11)" a make sure you follow it.

②Remove the terminals of Fan wires. (Fig. 36)

③Replace the Fan by removing screws. Pay attention to mounting direction of the Fan. (Fig. 37)

④Reassemble.

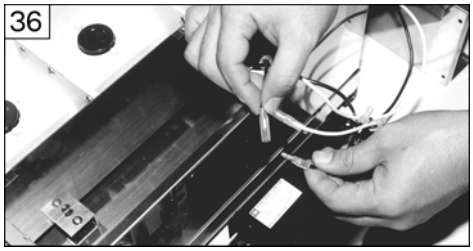

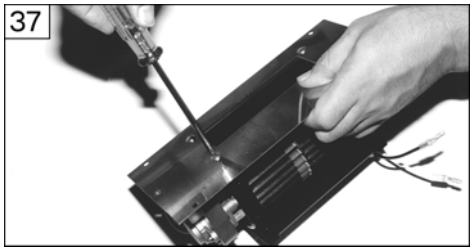

8.OUTLINE DRAWING AND WIRING DIAGRAM

Outline drawing of Ultrasonic Humidifier BNU2000~8000

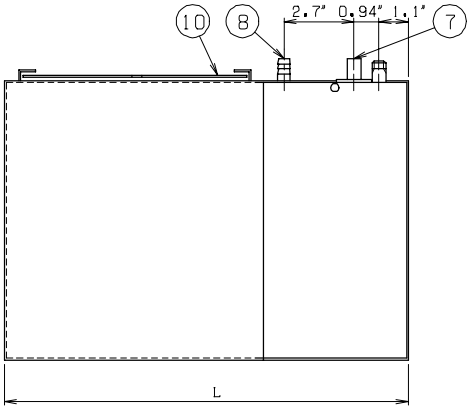

ITEM	PART NAME	SPEC./TYPE
13	Opening for conduit	7/8" (φ22)
12	Water supply valve	To be provided by user
11	Water supply tube	1/4" (6mm) O.D. To be provided by user
10	Filter	
9	Exit pipe	PE
8	Overflow pipe	1/2"O.D. 3/8"I.D.
7	Drainage joint	1/2"O.D. 3/8"I.D.
6	Fan	AC48V
5	Mist generator	ABS
4	Mounting foot	STAINLESS STEEL
3	Junction box	STAINLESS STEEL
2	Enclosure cover	STAINLESS STEEL
1	Enclosure	STAINLESS STEEL

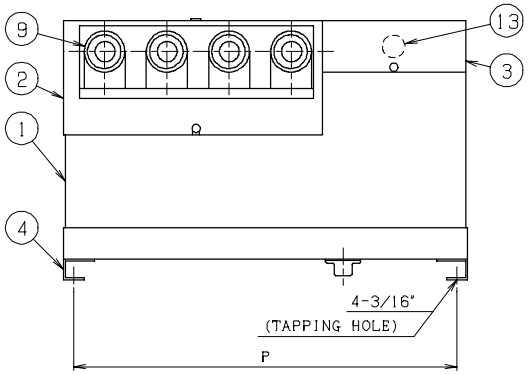

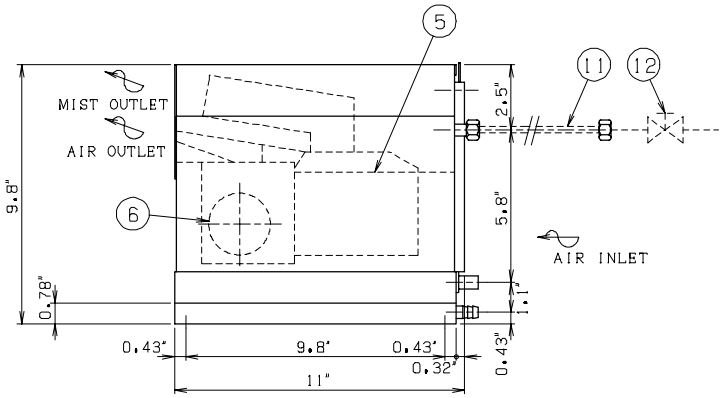

Model	BNU2000	BNU3000	BNU4000	BNU6000	BNU8000
Dimension L [inch] (mm)	15.4(390)	20.1(510)	24.8(630)	34.3(870)	43.7(1110)
Dimension P [inch] (mm)	14.6(370)	19.3(490)	24.0(610)	33.5(850)	42.9(1090)

Wiring diagram of Ultrasonic Humidifier BNU2000~8000

BNU2000·3000·4000

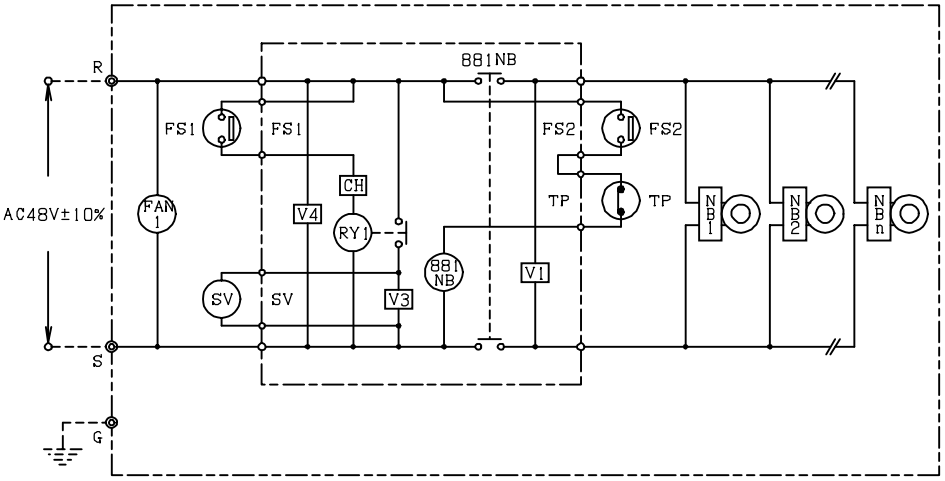

BNU6000·80000

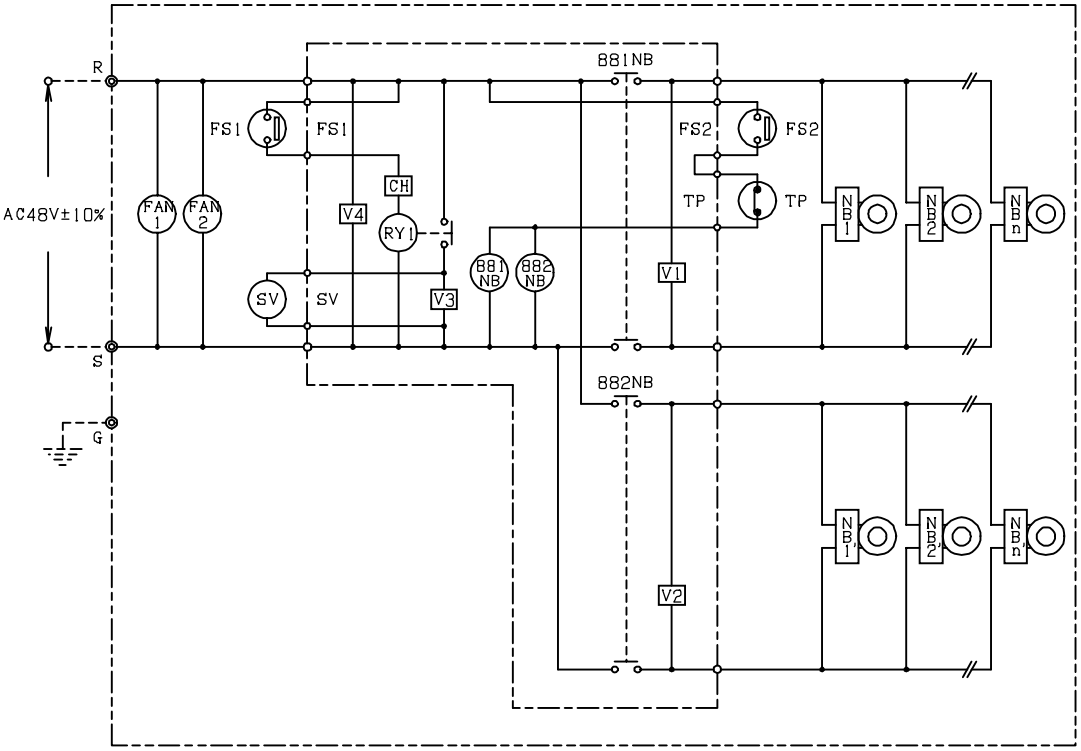

ITEM	SYMBOL	PART NAME	SPEC/TYPE
1	NB1~n·1'~n'	Ultrasonic Nebulizer Unit	NB-59S AC48V
2	V1~V4	Varistor	
3	TP	Thermostat	
4	881·2NB	Power Relay	AC48V 2T
5	RY1	Auxiliary Water Relay	DC24V 1a
6	FS1	Float Switch for Water Supply	ON in down position
7	FS2	Float Switch for Low Water Level	ON in up position
8	SV	Solenoid Valve	AC48V
9	CH	Printed Circuit Board	
10	FAN1·2	FAN	AC48V

North American Headquarters

1572 Tilco Drive, Frederick, Maryland USA 21704, USA
Phone: (301) 620-2033, Facsimile: (301) 662-5487, email: info@stulz-ats.com
www. **stulz-ats**.com